REVISIONS				
ZONE	LTR	DESCRIPTION	DATE	APPROVED

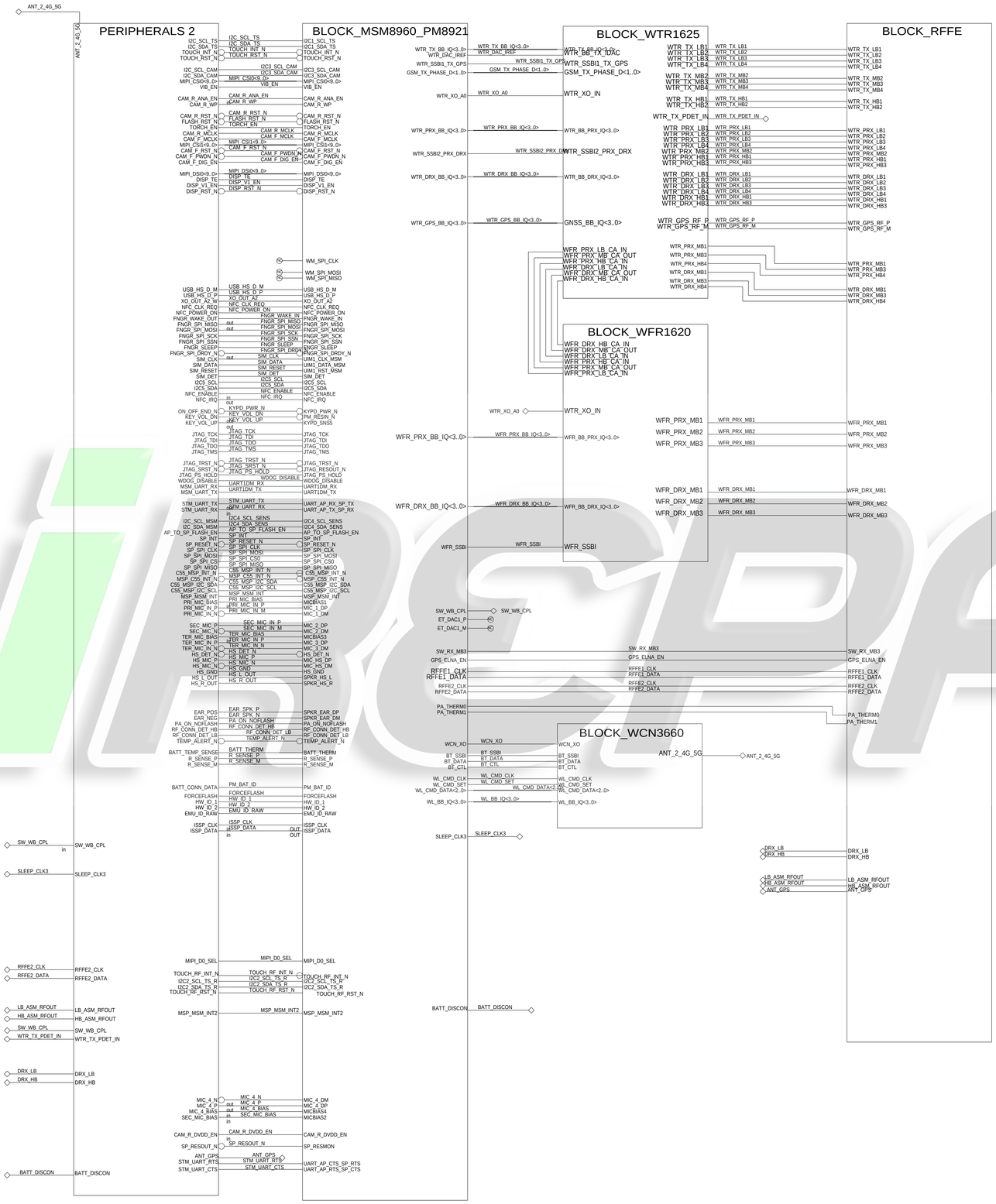

APPROVALS	MOTOROLA MOBILE DEVICES
ENGINEER: UDI ELRAN	BLOCK TITLE:
LAST MODIFIED BY: UDI ELRAN Thu Jun 26 14:15:15 2014	84016292001_b
MOTOROLA CONFIDENTIAL RESTRICTED	D · PROJECT NAME: 84016292001_b.cpm · REV 01
	CAD FILE NAME: · PAGE 1 OF 55

THE DRAWING ON THIS PRINT AND INFORMATION THEREWITH ARE PROPRIETARY TO MOTOROLA AND SHALL NOT BE USED OR DISCUSSED IN WHOLE OR IN PART WITHOUT MOTOROLA'S CONSENT. © COPYRIGHT, MOTOROLA. THIS DOES NOT IMPLY PUBLICATION

ABBAGOOCHIE ME/SHIELDS

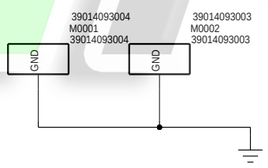

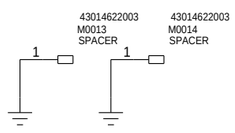

iREPAIR

APPROVALS	MOTOROLA MOBILE DEVICES	
ENGINEER:	BLOCK TITLE: 84016292001_b	
LAST MODIFIED BY: Thu Jun 26 14:15:21 2014		
MOTOROLA CONFIDENTIAL RESTRICTED	B	PROJECT NAME 84016292001_b.cpm	REV 01
THE DRAWING ON THIS PRINT AND INFORMATION THEREWITH ARE PROPRIETARY TO MOTOROLA AND SHALL NOT BE USED OR DISCUSSED IN WHOLE OR IN PART WITHOUT MOTOROLA'S CONSENT.	CAD FILE NAME:	PAGE 2 OF 55

© COPYRIGHT, MOTOROLA. THIS DOES NOT IMPLY PUBLICATION

ANTENNA TUNERS

REF: 600 - 899

REVISIONS				
ZONE	LTR	DESCRIPTION	DATE	APPR.

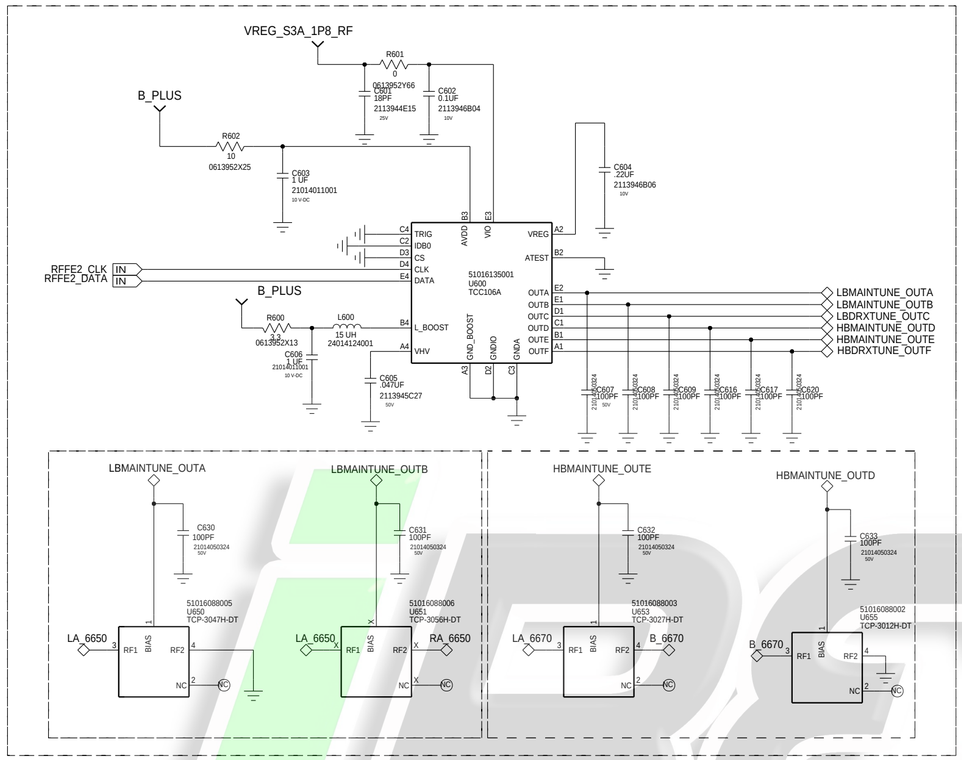

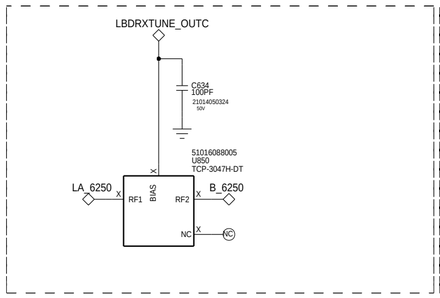

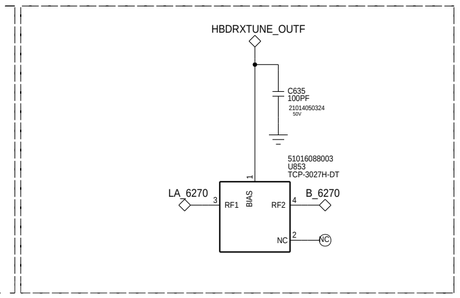

iRepair

APPROVALS	MOTOROLA MOBILE DEVICES
ENGINEER: BUSTAMANTE	BLOCK TITLE: 84016292001_b
LAST MODIFIED BY: BUSTAMANTE Thu Jun 26 14:15:26 2014	
MOTOROLA CONFIDENTIAL RESTRICTED	C PROJECT NAME 84016292001_b.cpm — REV 01
THE DRAWING ON THIS PRINT AND INFORMATION THEREWITH ARE PROPRIETARY TO MOTOROLA AND SHALL NOT BE USED OR DISCUSSED IN WHOLE OR IN PART WITHOUT MOTOROLA'S CONSENT. © COPYRIGHT, MOTOROLA. THIS DOES NOT IMPLY PUBLICATION	CAD FILE NAME:

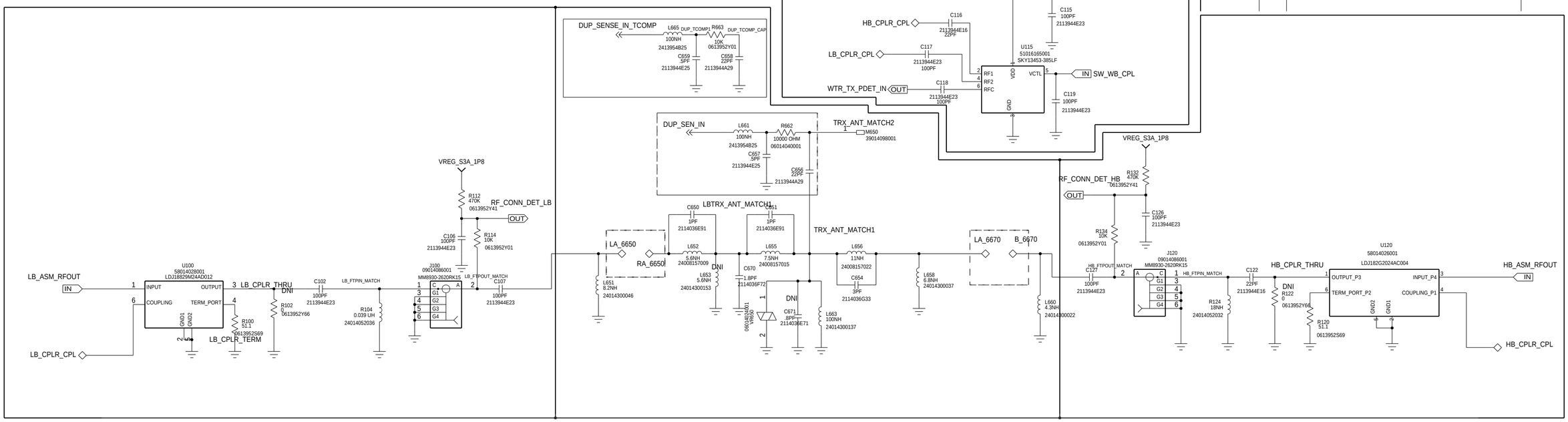

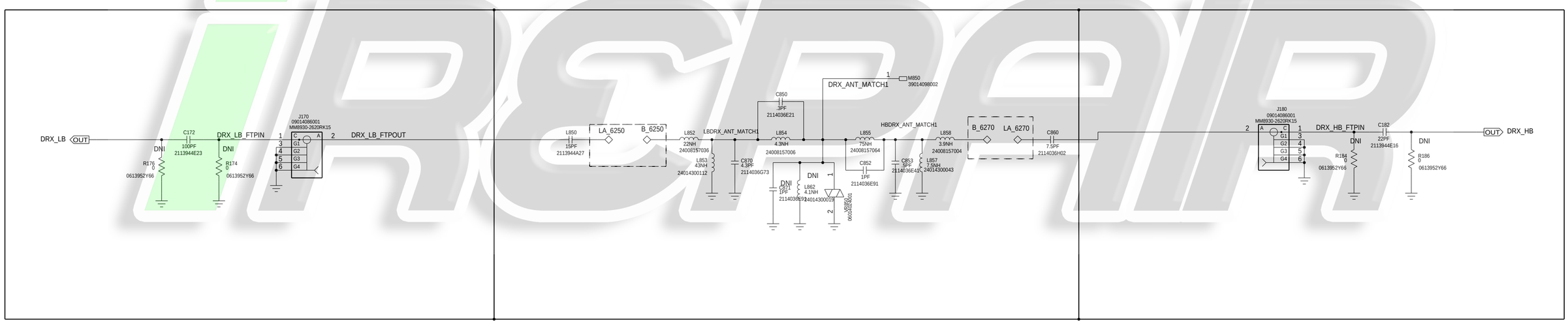

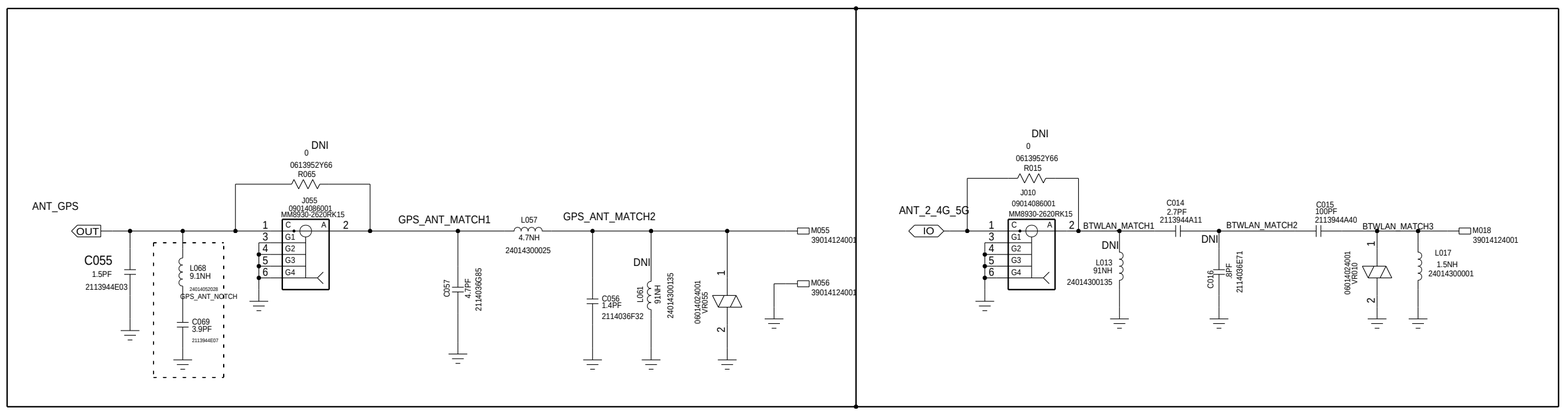

APPROVALS	MOTOROLA MOBILE DEVICES
ENGINEER: BUSTAMANTE	BLOCK TITLE: 84016292001_b
LAST MODIFIED BY: BUSTAMANTE Thu Jun 26 14:15:35 2014	
MOTOROLA CONFIDENTIAL RESTRICTED	C — PROJECT NAME: 84016292001_b.cpm — REV: 01
THE DRAWING ON THIS PRINT AND INFORMATION THEREWITH ARE PROPRIETARY TO MOTOROLA AND SHALL NOT BE USED OR DISCUSSED IN WHOLE OR IN PART WITHOUT MOTOROLA'S CONSENT. © COPYRIGHT, MOTOROLA. THIS DOES NOT IMPLY PUBLICATION	CAD FILE NAME: — PAGE 4 of 55

iREPAIR

LIGHTING

iRepair

APPROVALS	MOTOROLA MOBILE DEVICES
ENGINEER:	BLOCK TITLE: 84016292001_b
LAST MODIFIED BY: TIM MILLER Fri Nov 08 14:18:18 2013	
MOTOROLA CONFIDENTIAL RESTRICTED	B — PROJECT NAME: 84016292001_b.cpm — REV: 01
	CAD FILE NAME: — PAGE 5 OF 55

THE DRAWING ON THIS PRINT AND INFORMATION THEREWITH ARE PROPRIETARY TO MOTOROLA AND SHALL NOT BE USED OR DISCUSSED IN WHOLE OR IN PART WITHOUT MOTOROLA'S CONSENT.
© COPYRIGHT, MOTOROLA. THIS DOES NOT IMPLY PUBLICATION

REVISIONS				
ZONE	LTR	DESCRIPTION	DATE	APPR.

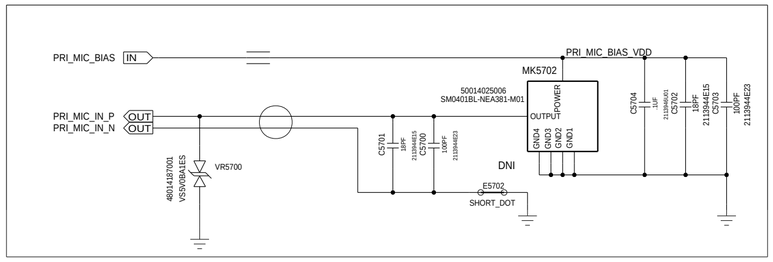

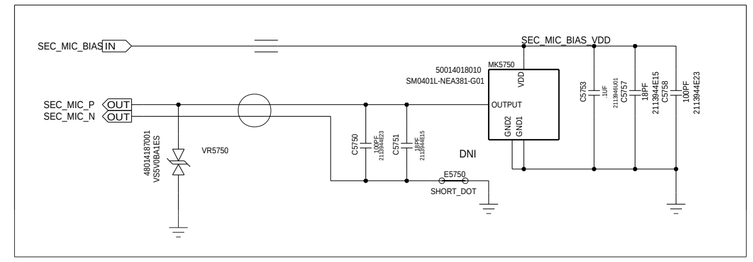

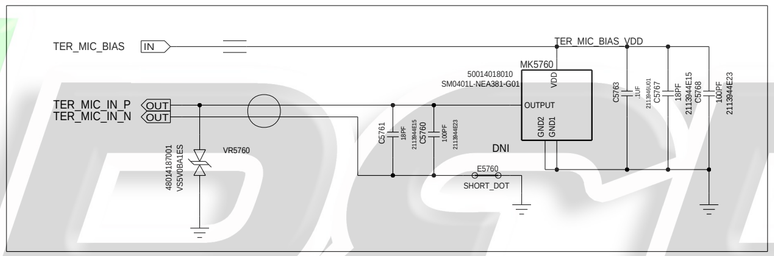

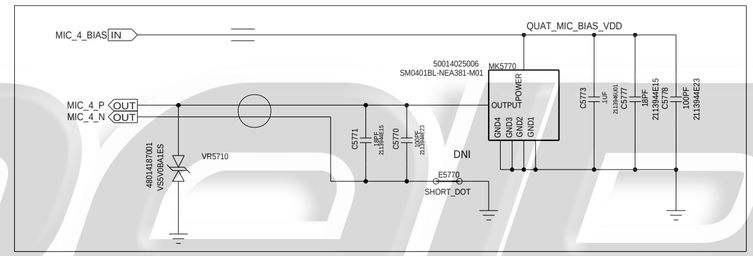

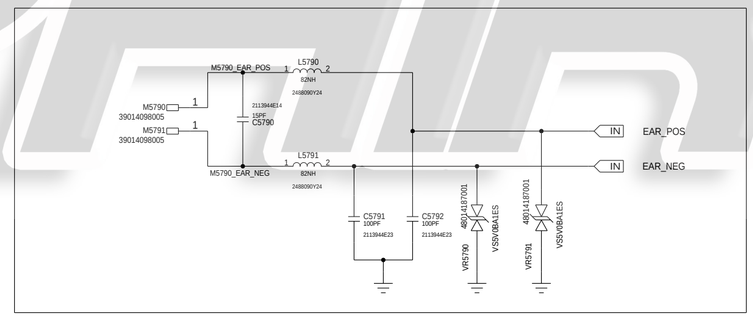

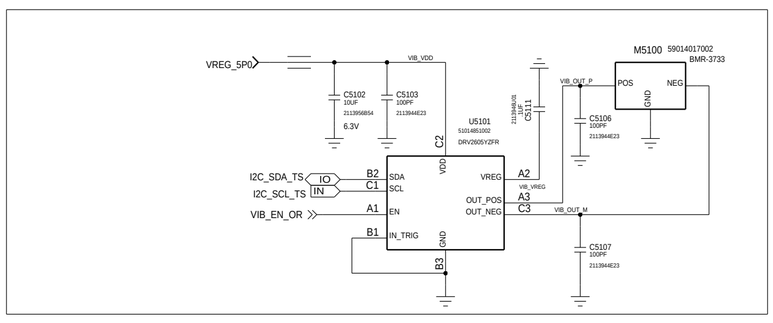

APPROVALS	MOTOROLA MOBILE DEVICES
ENGINEER: MATT HULL	BLOCK TITLE: 84016292001_b
LAST MODIFIED BY: OREN RAPPOPORT Thu Jun 26 14:15:47 2014	
MOTOROLA CONFIDENTIAL RESTRICTED	C — PROJECT NAME: 84016292001_b.cpm — REV: 01
THE DRAWING ON THIS PRINT AND INFORMATION THEREWITH ARE PROPRIETARY TO MOTOROLA AND SHALL NOT BE USED OR DISCUSSED IN WHOLE OR IN PART WITHOUT MOTOROLA'S CONSENT. © COPYRIGHT, MOTOROLA. THIS DOES NOT IMPLY PUBLICATION	CAD FILE NAME: — PAGE 6 of 55

iRepair

SENSOR HUB

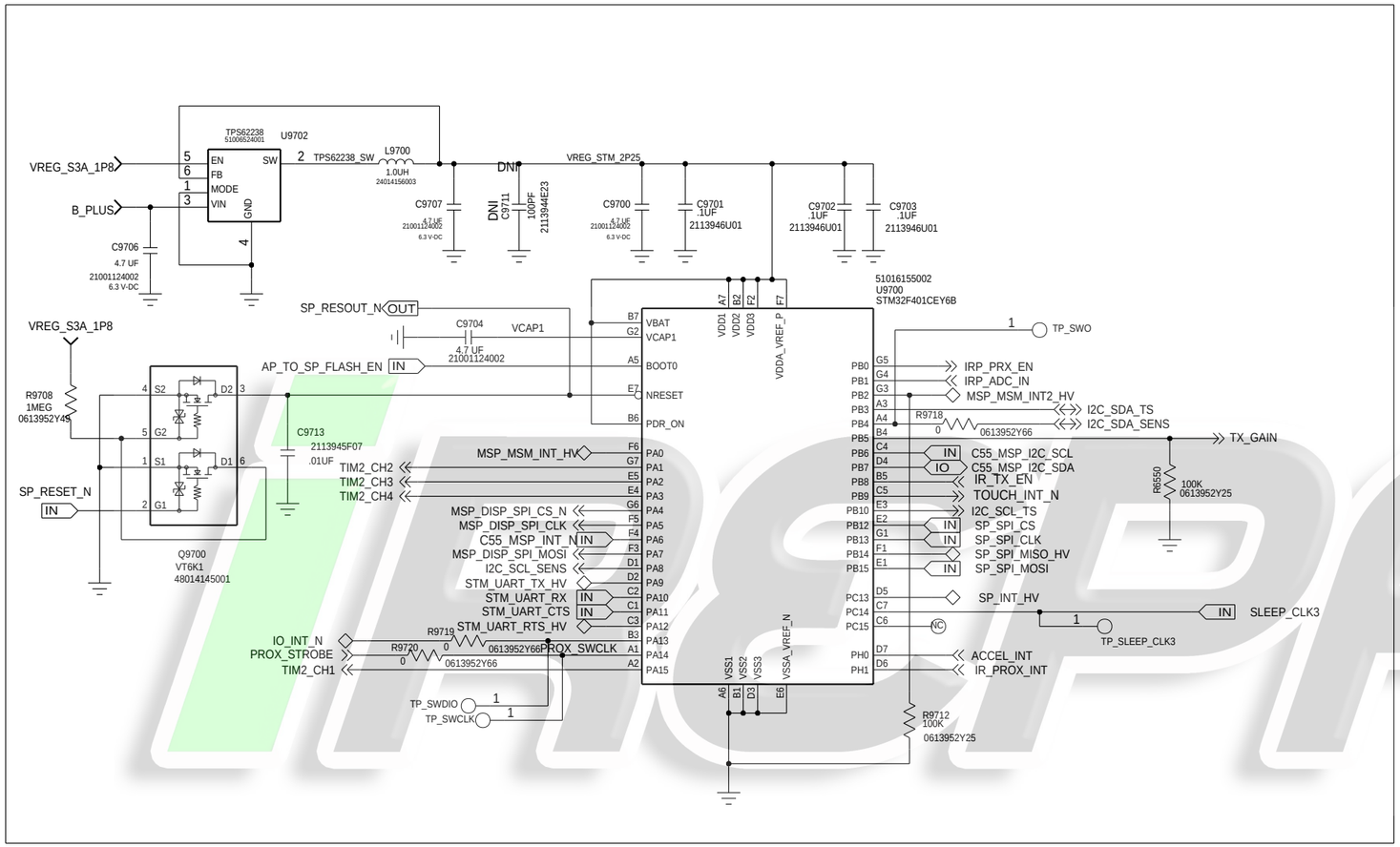

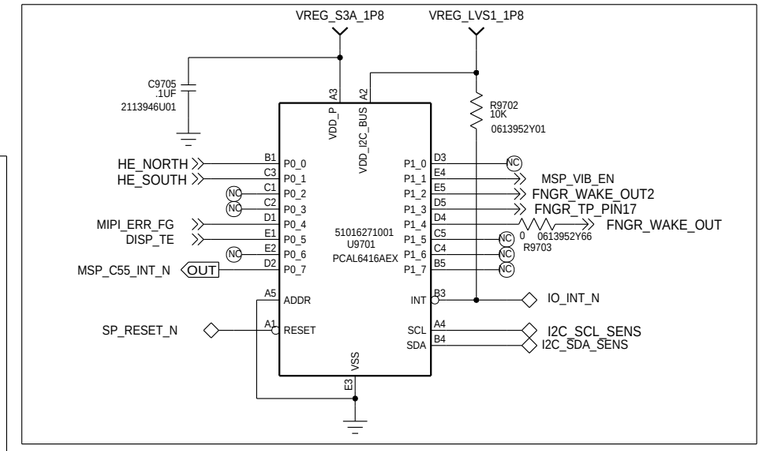

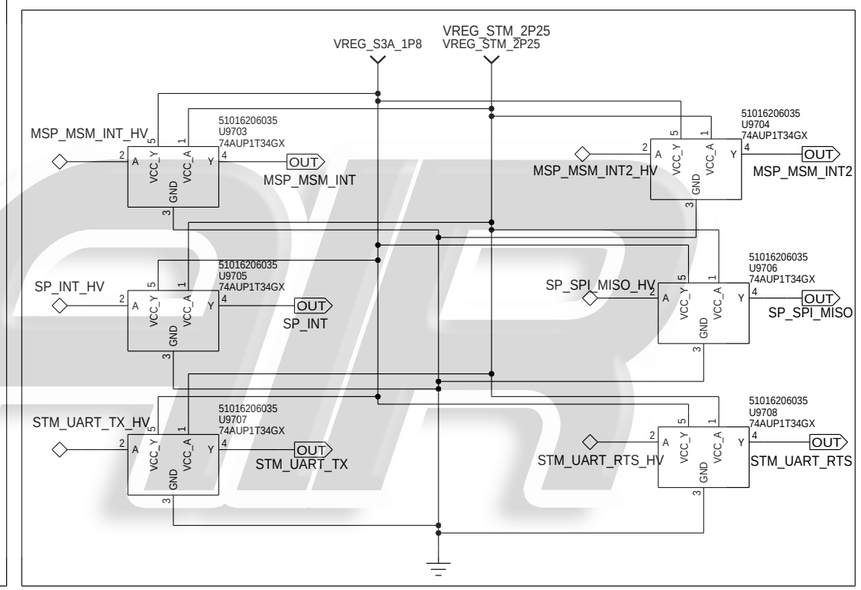

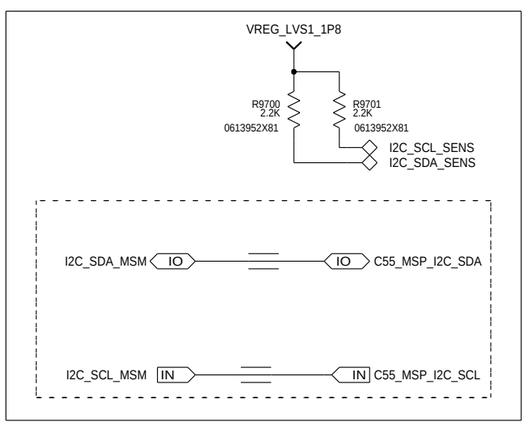

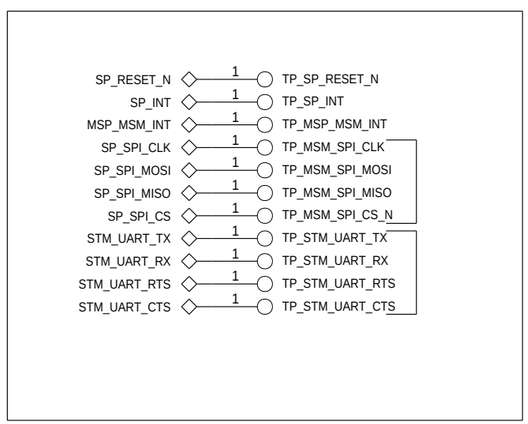

APPROVALS	MOTOROLA MOBILE DEVICES
ENGINEER: NATE CONNELL	BLOCK TITLE: 84016292001_b
LAST MODIFIED BY: NATE CONNELL Thu Jun 26 14:15:52 2014	
MOTOROLA CONFIDENTIAL RESTRICTED	B — PROJECT NAME: 84016292001_b.cpm — REV: 01
THE DRAWING ON THIS PRINT AND INFORMATION THEREWITH ARE PROPRIETARY TO MOTOROLA AND SHALL NOT BE USED OR DISCUSSED IN WHOLE OR IN PART WITHOUT MOTOROLA'S CONSENT. © COPYRIGHT, MOTOROLA. THIS DOES NOT IMPLY PUBLICATION	CAD FILE NAME:
	PAGE 7 OF 55

SENSORS

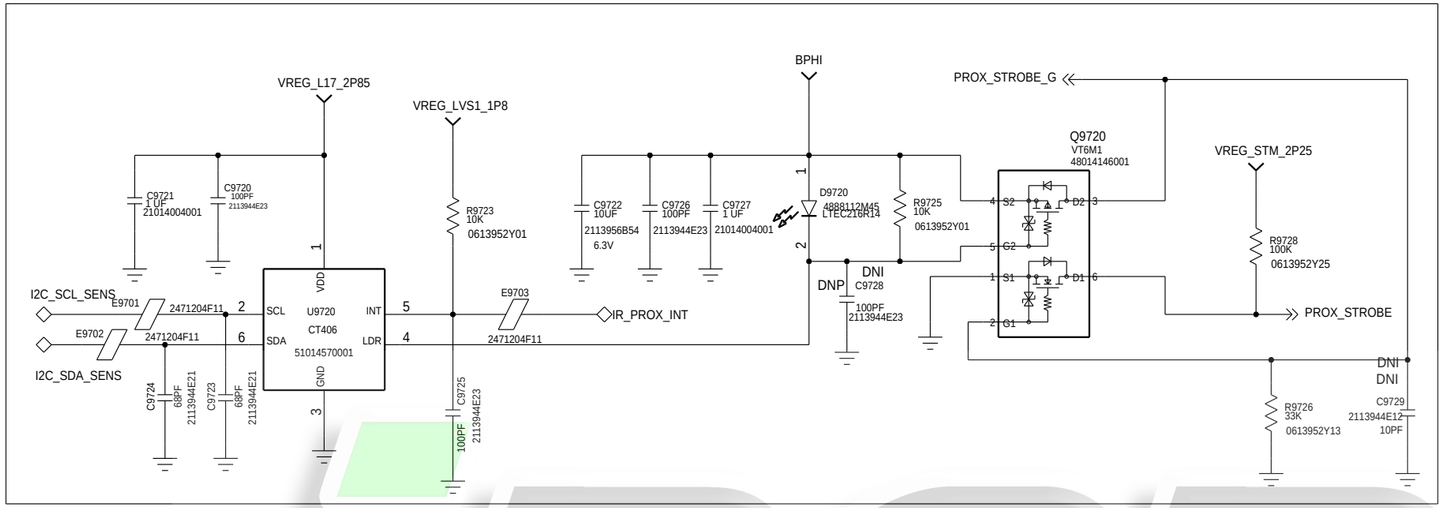

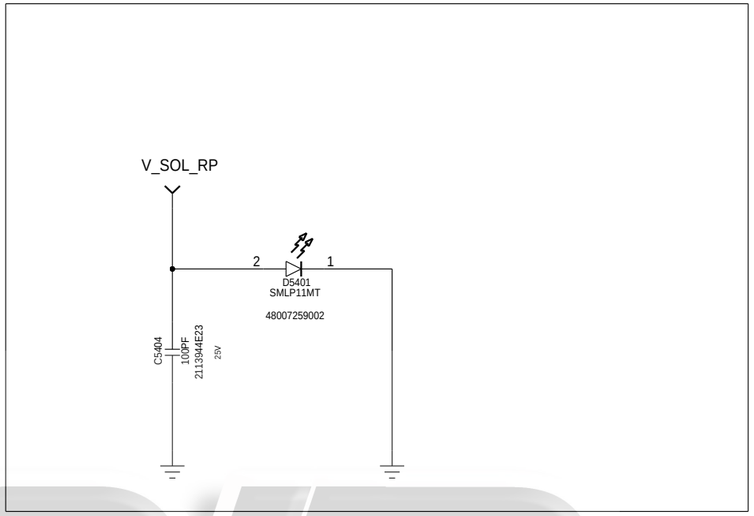

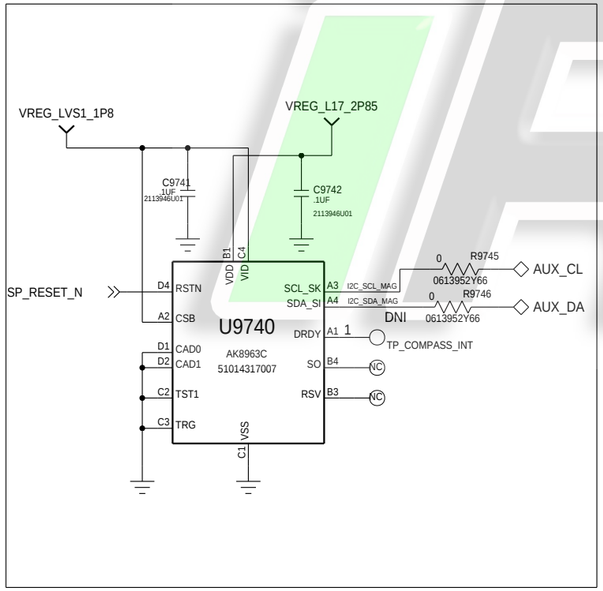

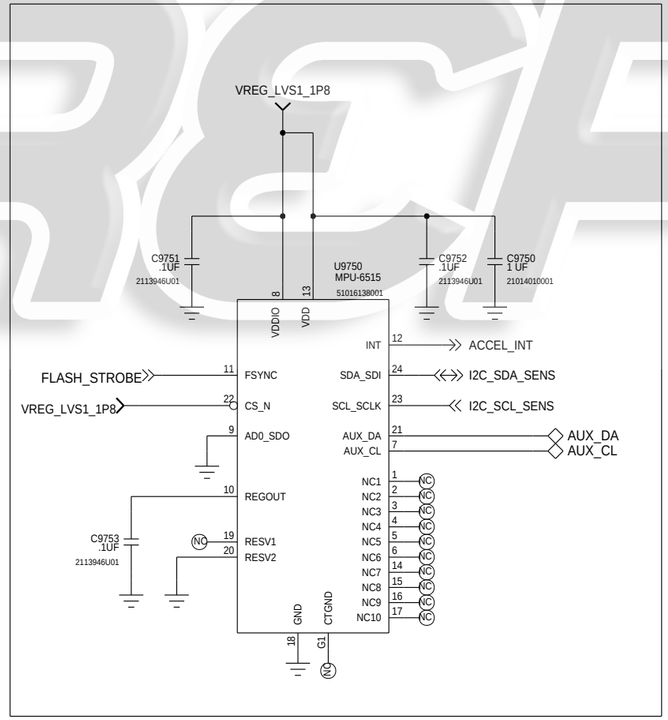

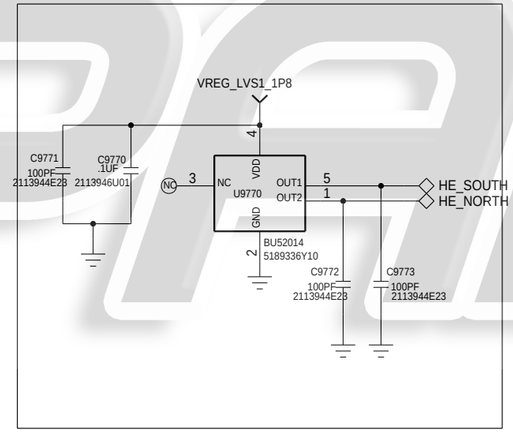

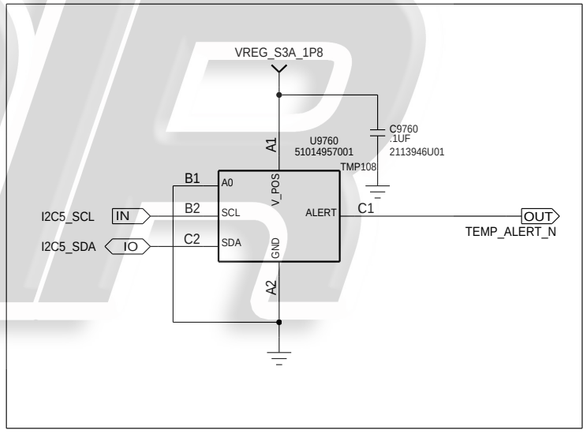

APPROVALS	MOTOROLA MOBILE DEVICES
ENGINEER: C HERNANDEZ	BLOCK TITLE: 84016292001_b
LAST MODIFIED BY: C HERNANDEZ Thu Jun 26 14:15:59 2014	
MOTOROLA CONFIDENTIAL RESTRICTED	B — PROJECT NAME: 84016292001_b.cpm — REV: 01
THE DRAWING ON THIS PRINT AND INFORMATION THEREWITH ARE PROPRIETARY TO MOTOROLA AND SHALL NOT BE USED OR DISCUSSED IN WHOLE OR IN PART WITHOUT MOTOROLA'S CONSENT. © COPYRIGHT, MOTOROLA. THIS DOES NOT IMPLY PUBLICATION	CAD FILE NAME:

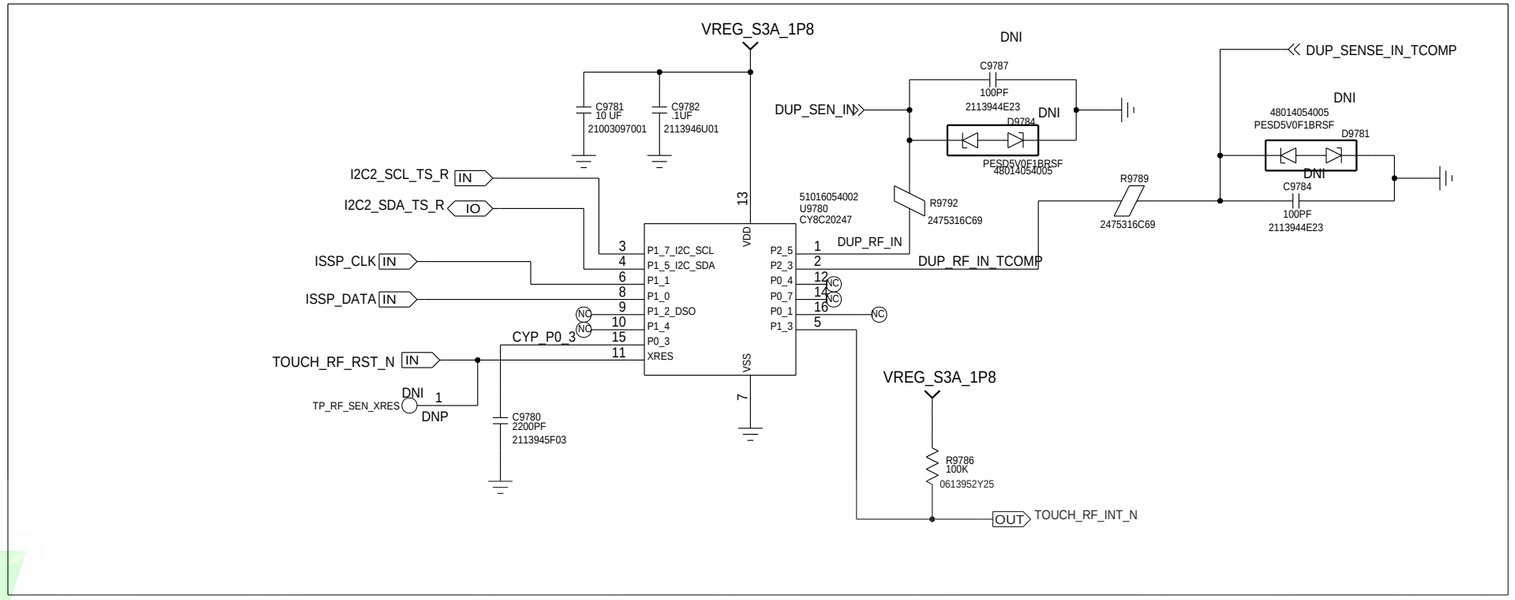

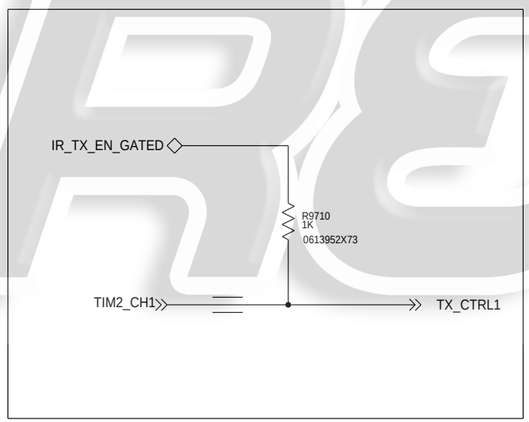

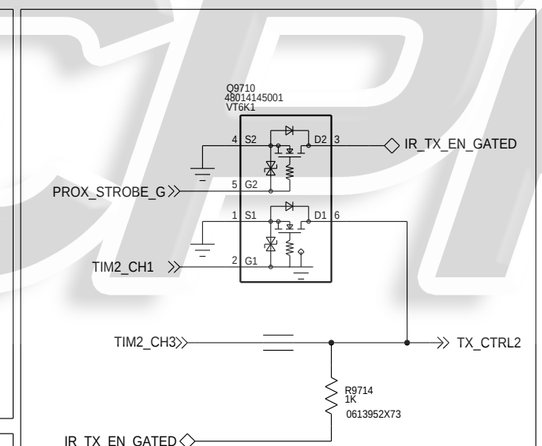

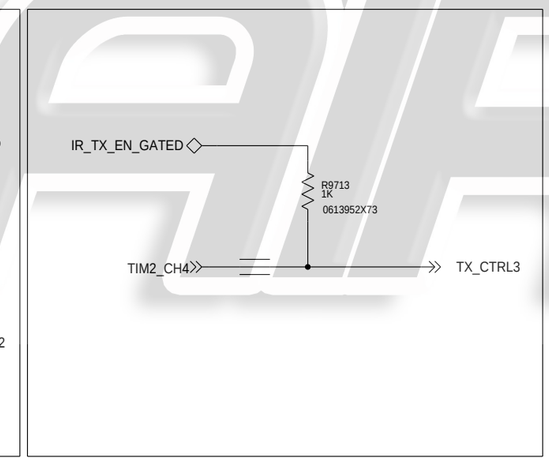

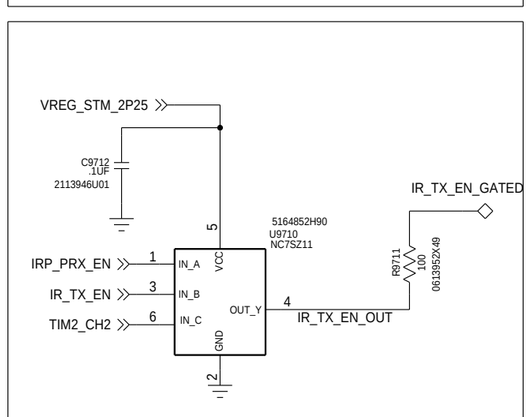

APPROVALS	MOTOROLA MOBILE DEVICES
ENGINEER: HERNANDEZ	BLOCK TITLE: 84016292001_b
LAST MODIFIED BY: HERNANDEZ Thu Jun 26 14:16:05 2014	
MOTOROLA CONFIDENTIAL RESTRICTED	B — PROJECT NAME: 84016292001_b.cpm — REV: 01
THE DRAWING ON THIS PRINT AND INFORMATION THEREWITH ARE PROPRIETARY TO MOTOROLA AND SHALL NOT BE USED OR DISCUSSED IN WHOLE OR IN PART WITHOUT MOTOROLA'S CONSENT. © COPYRIGHT, MOTOROLA. THIS DOES NOT IMPLY PUBLICATION	CAD FILE NAME: — PAGE 9 OF 55

iRepair

EMU+POWER

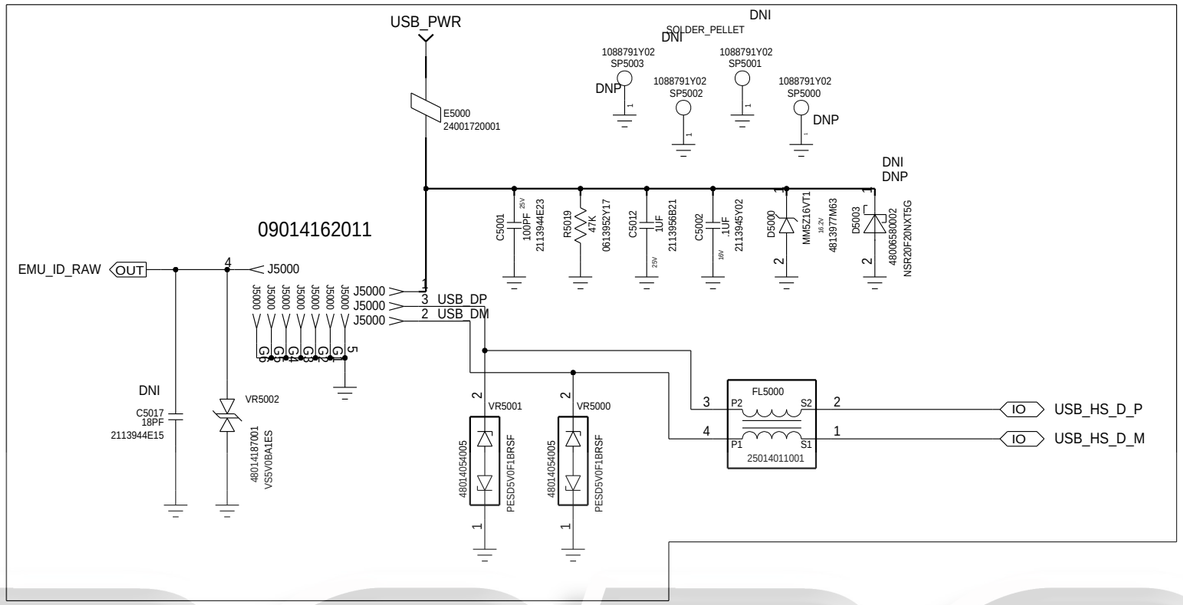

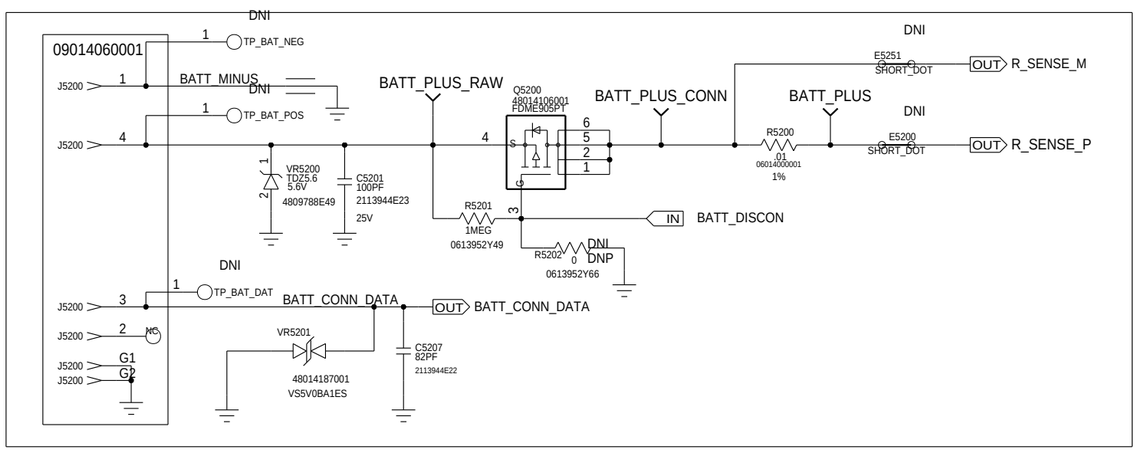

iREPAIR

APPROVALS	MOTOROLA MOBILE DEVICES	
ENGINEER: RICH NG	BLOCK TITLE: 84016292001_b	
LAST MODIFIED BY: GARY QUARTANA Thu Jun 26 14:16:11 2014		
MOTOROLA CONFIDENTIAL RESTRICTED	B	PROJECT NAME 84016292001_b.cpm	REV 01
THE DRAWING ON THIS PRINT AND INFORMATION THEREWITH ARE PROPRIETARY TO MOTOROLA AND SHALL NOT BE USED OR DISCUSSED IN WHOLE OR IN PART WITHOUT MOTOROLA'S CONSENT.	CAD FILE NAME:	PAGE 10 OF 55

© COPYRIGHT, MOTOROLA. THIS DOES NOT IMPLY PUBLICATION

iRepair

APPROVALS	MOTOROLA MOBILE DEVICES
ENGINEER:	BLOCK TITLE: 84016292001_b
LAST MODIFIED BY: FROEHLING Fri Feb 14 20:03:35 2014	
MOTOROLA CONFIDENTIAL RESTRICTED	B — PROJECT NAME: 84016292001_b.cpm — REV: 01
	CAD FILE NAME: — PAGE 11 OF 55

THE DRAWING ON THIS PRINT AND INFORMATION THEREWITH ARE PROPRIETARY TO MOTOROLA AND SHALL NOT BE USED OR DISCUSSED IN WHOLE OR IN PART WITHOUT MOTOROLA'S CONSENT.
© COPYRIGHT, MOTOROLA. THIS DOES NOT IMPLY PUBLICATION

GESTURE DETECT IR REF 6500-6549

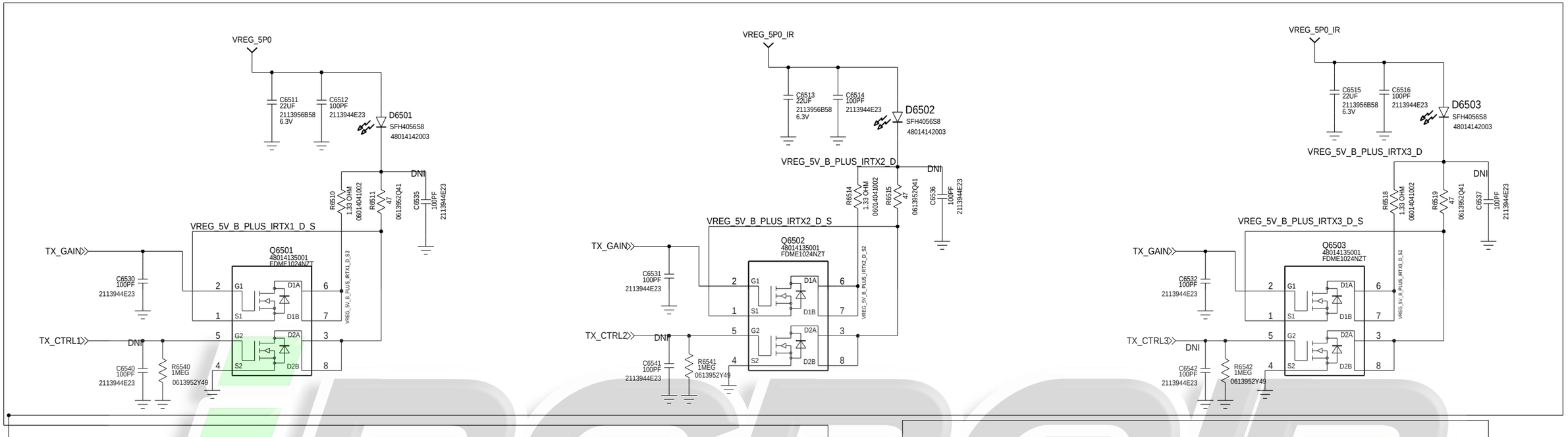

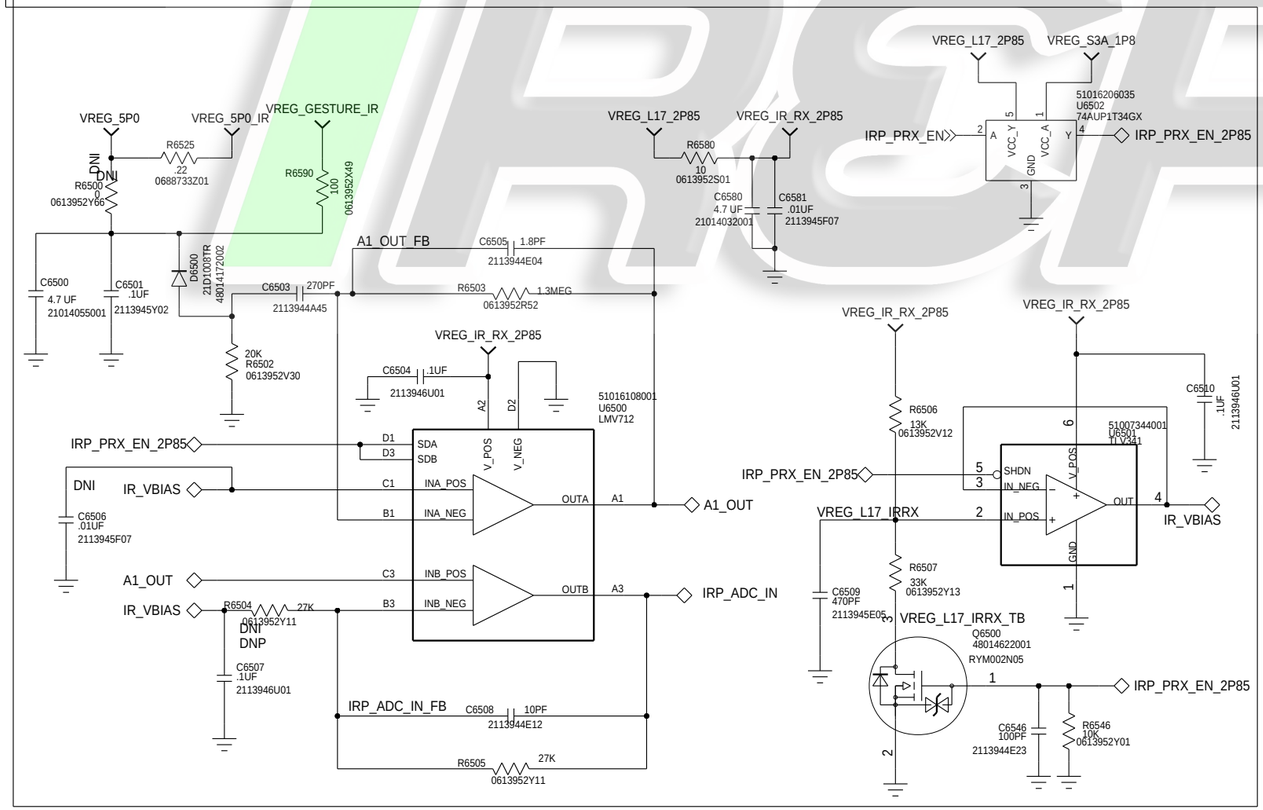

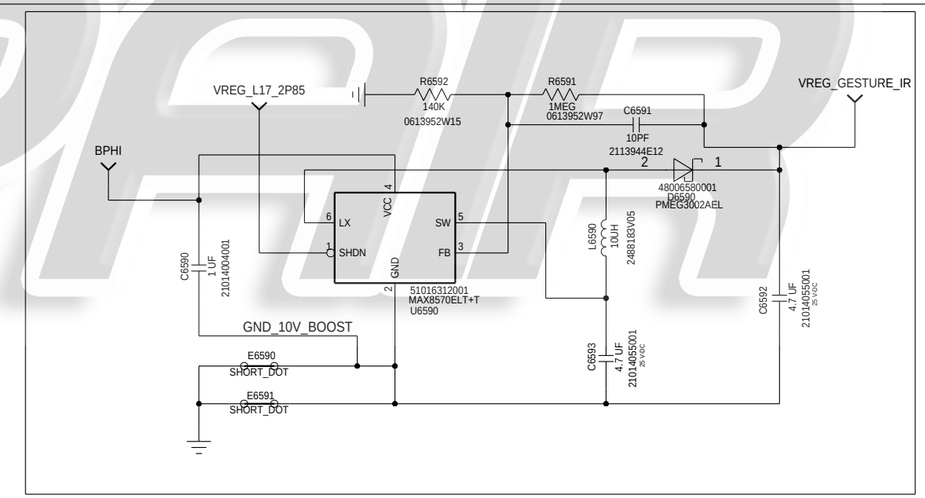

APPROVALS	MOTOROLA MOBILE DEVICES
ENGINEER: MATT MOTTIER	BLOCK TITLE: 84016292001_b
LAST MODIFIED BY: JESSE HONG Thu Jun 26 14:16:22 2014	
MOTOROLA CONFIDENTIAL RESTRICTED	B — PROJECT NAME: 84016292001_b.cpm — REV: 01
THE DRAWING ON THIS PRINT AND INFORMATION THEREWITH ARE PROPRIETARY TO MOTOROLA AND SHALL NOT BE USED OR DISCUSSED IN WHOLE OR IN PART WITHOUT MOTOROLA'S CONSENT. © COPYRIGHT, MOTOROLA. THIS DOES NOT IMPLY PUBLICATION	CAD FILE NAME:
	PAGE 12 OF 55

IRSPEC

JTAG

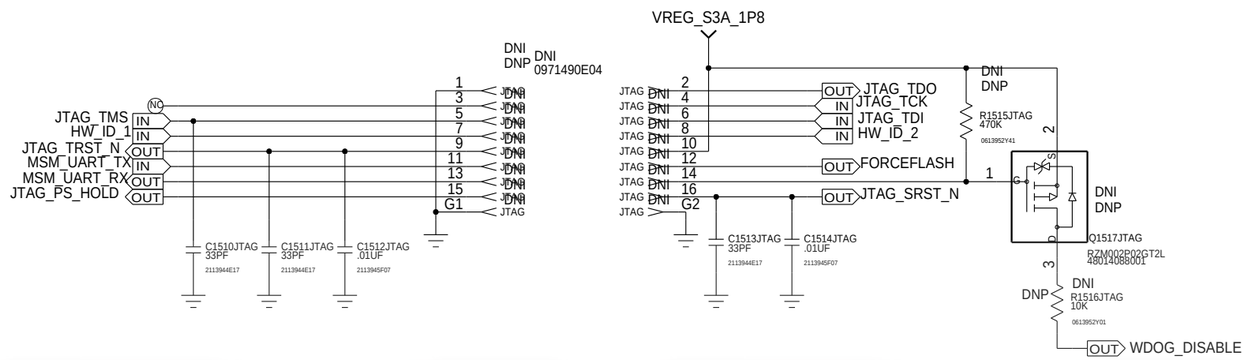

iREPAIR

APPROVALS	MOTOROLA MOBILE DEVICES
ENGINEER:	BLOCK TITLE: 84016292001_b
LAST MODIFIED BY: Thu Jun 26 14:16:28 2014	
MOTOROLA CONFIDENTIAL RESTRICTED	B — PROJECT NAME: 84016292001_b.cpm — REV: 01
THE DRAWING ON THIS PRINT AND INFORMATION THEREWITH ARE PROPRIETARY TO MOTOROLA AND SHALL NOT BE USED OR DISCUSSED IN WHOLE OR IN PART WITHOUT MOTOROLA'S CONSENT. © COPYRIGHT, MOTOROLA. THIS DOES NOT IMPLY PUBLICATION	CAD FILE NAME:

3.5MM HEADSET

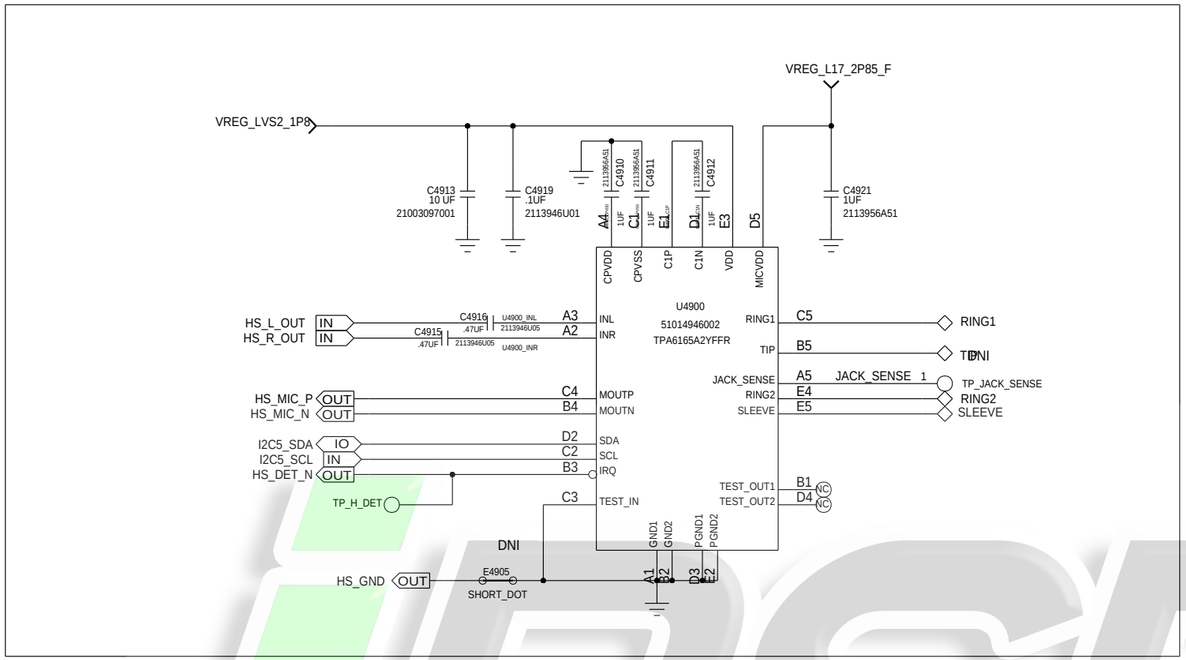

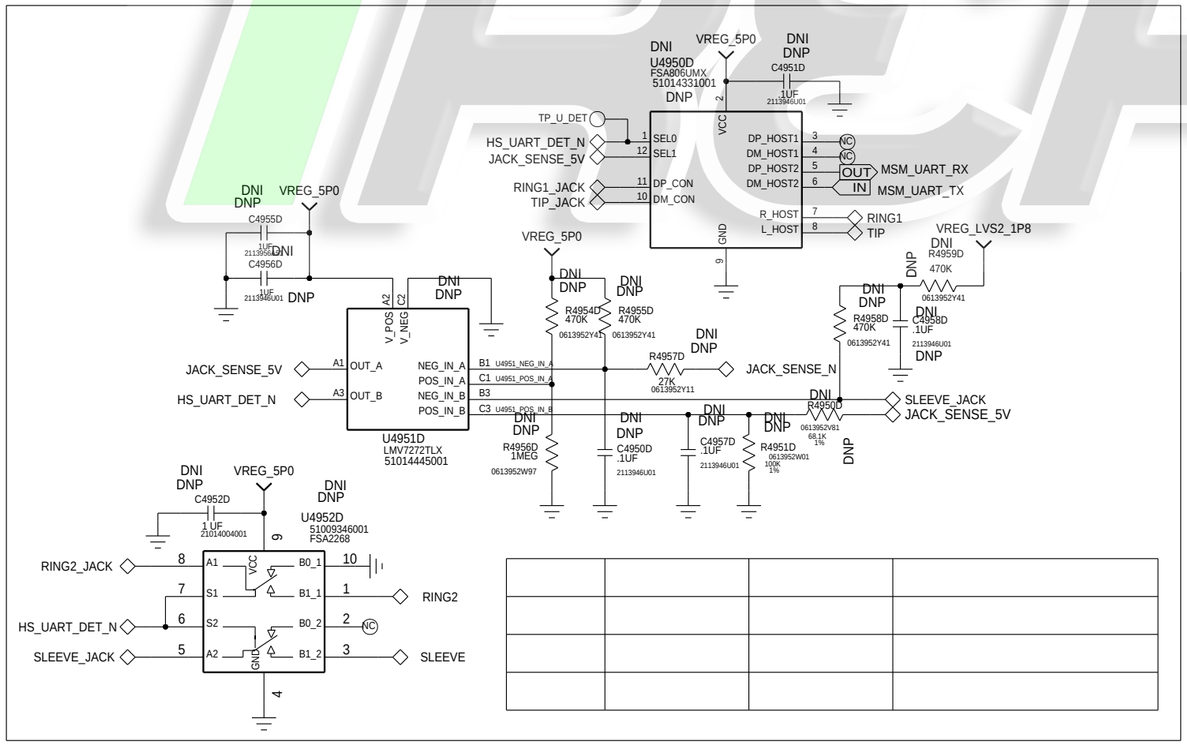

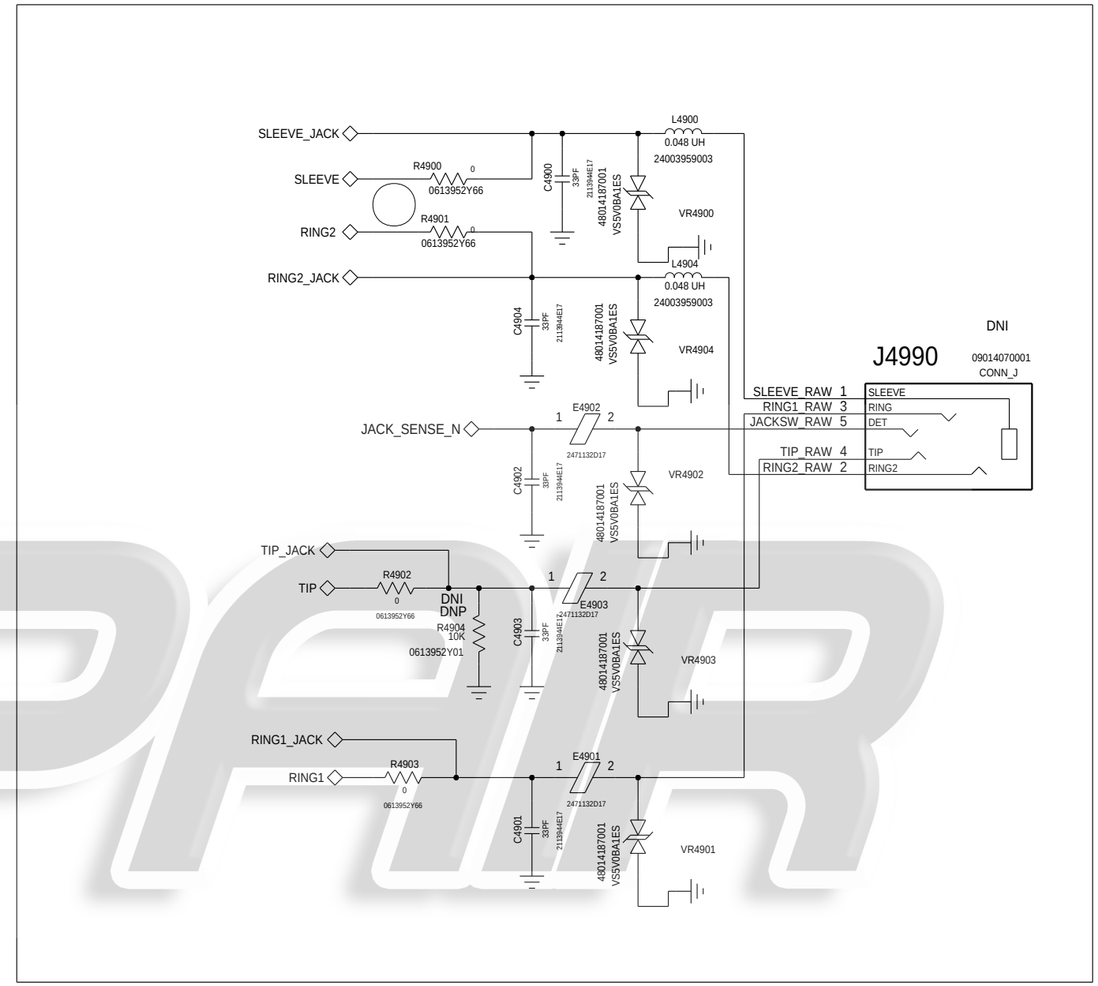

APPROVALS	MOTOROLA MOBILE DEVICES	
ENGINEER: MATT MOTTIER	BLOCK TITLE: 84016292001_b	
LAST MODIFIED BY: NATE CONNELL Thu Jun 26 14:16:34 2014		
MOTOROLA CONFIDENTIAL RESTRICTED	B	PROJECT NAME 84016292001_b.cpm	REV 01
THE DRAWING ON THIS PRINT AND INFORMATION THEREWITH ARE PROPRIETARY TO MOTOROLA AND SHALL NOT BE USED OR DISCUSSED IN WHOLE OR IN PART WITHOUT MOTOROLA'S CONSENT. © COPYRIGHT, MOTOROLA. THIS DOES NOT IMPLY PUBLICATION	CAD FILE NAME:	PAGE 14 OF 55

iFIXPDF

KEYS AND SIM

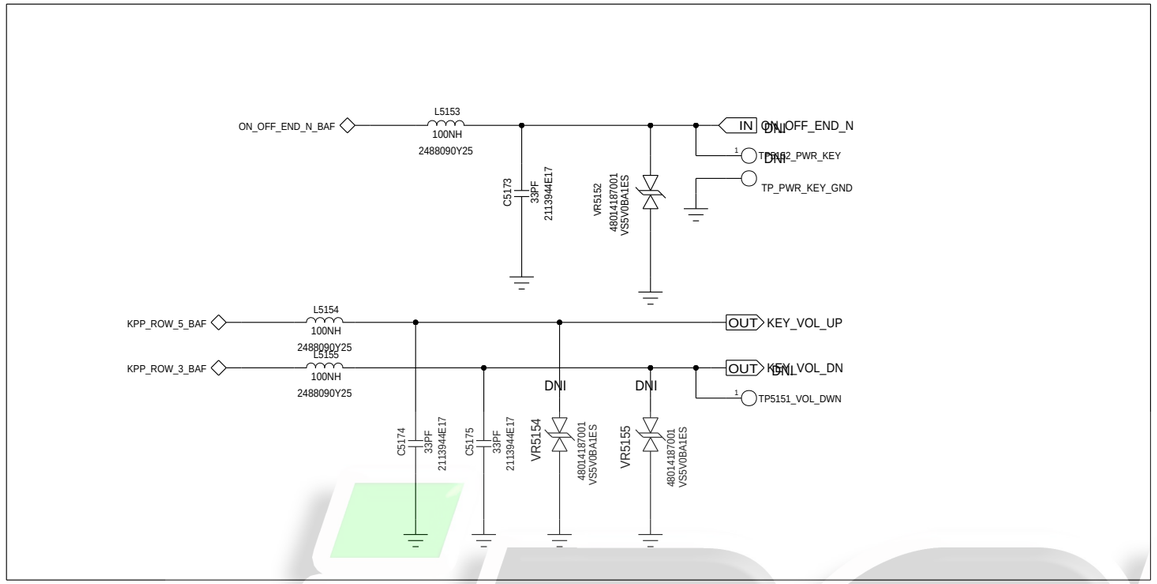

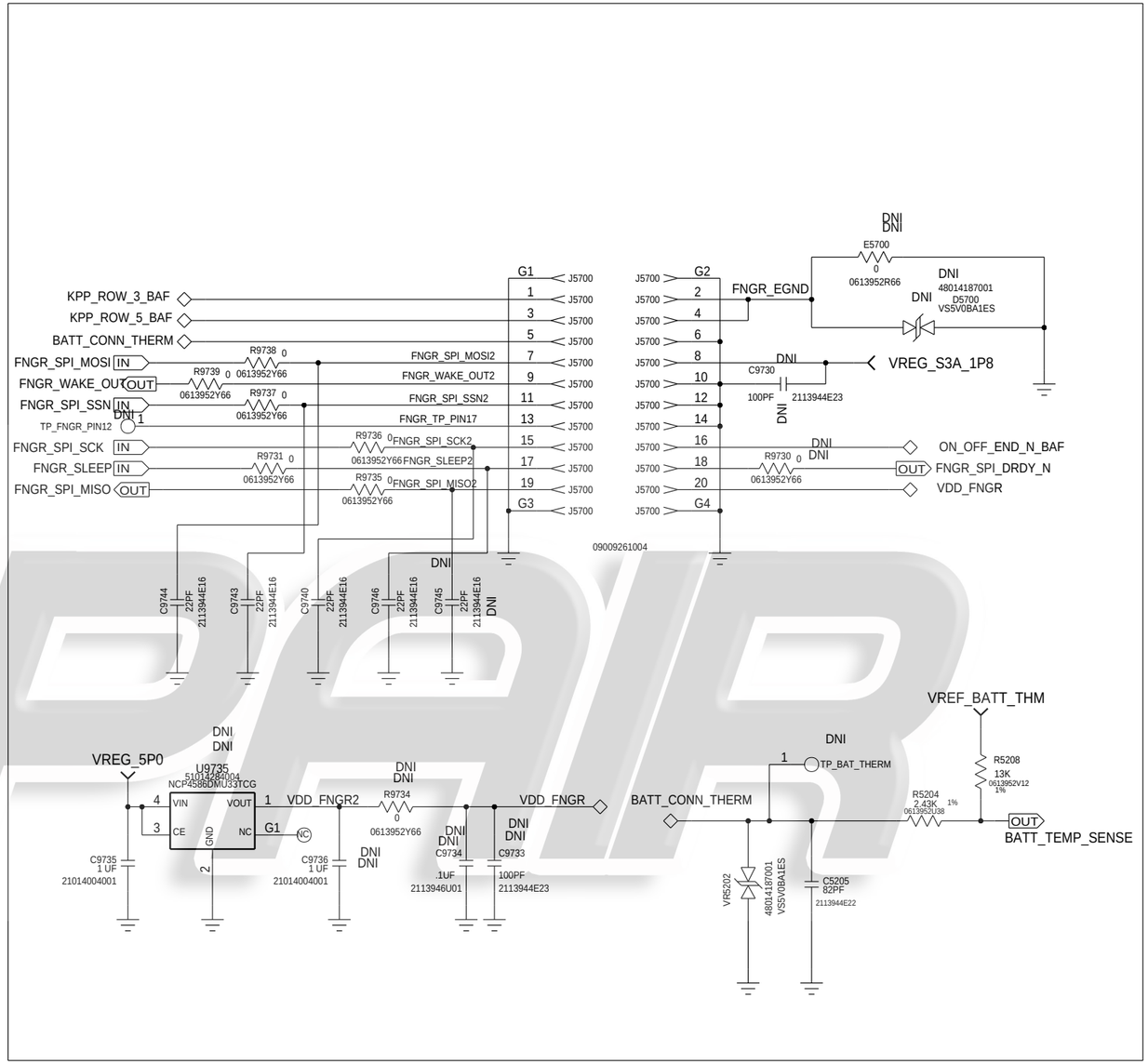

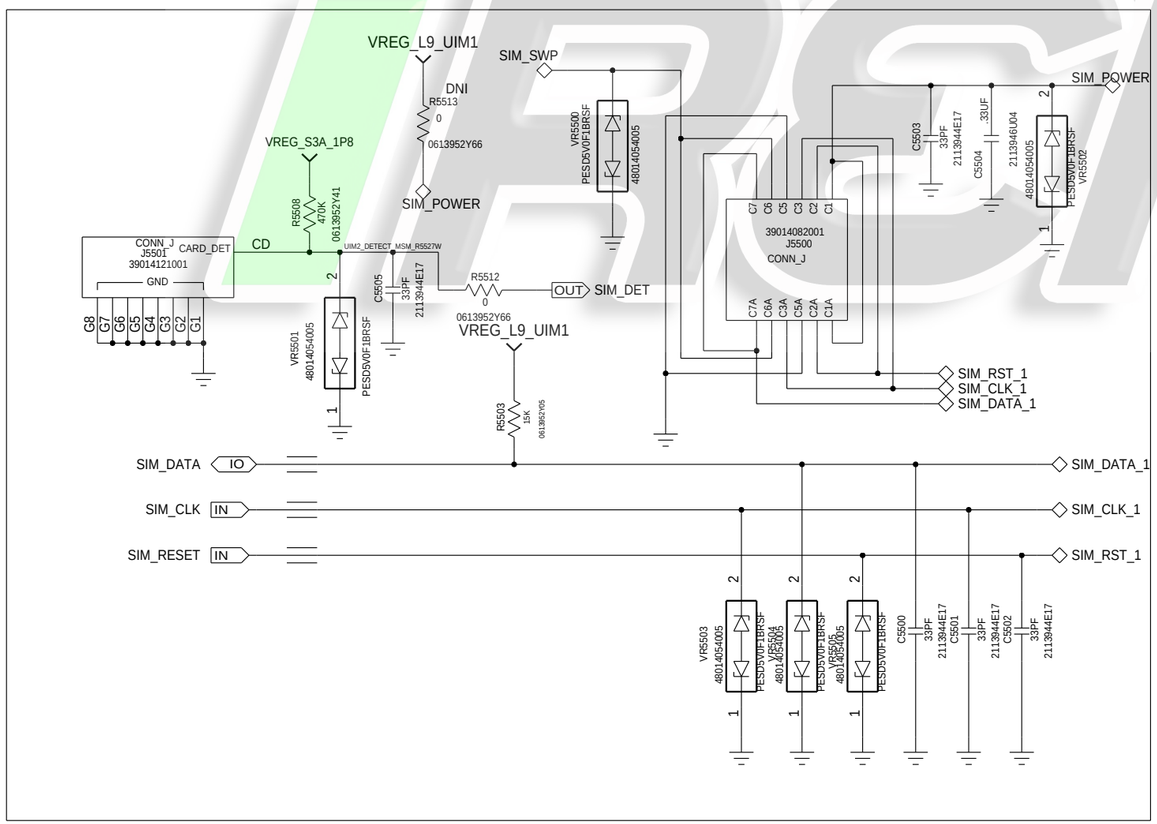

APPROVALS	MOTOROLA MOBILE DEVICES
ENGINEER:	BLOCK TITLE: 84016292001_b
LAST MODIFIED BY: Thu Jun 26 14:16:42 2014	
MOTOROLA CONFIDENTIAL RESTRICTED	B — PROJECT NAME: 84016292001_b.cpm — REV: 01
THE DRAWING ON THIS PRINT AND INFORMATION THEREWITH ARE PROPRIETARY TO MOTOROLA AND SHALL NOT BE USED OR DISCUSSED IN WHOLE OR IN PART WITHOUT MOTOROLA'S CONSENT. © COPYRIGHT, MOTOROLA. THIS DOES NOT IMPLY PUBLICATION	CAD FILE NAME: — PAGE 15 OF 55

iRepair

REVISIONS				
ZONE	LTR	DESCRIPTION	DATE	APPROVED

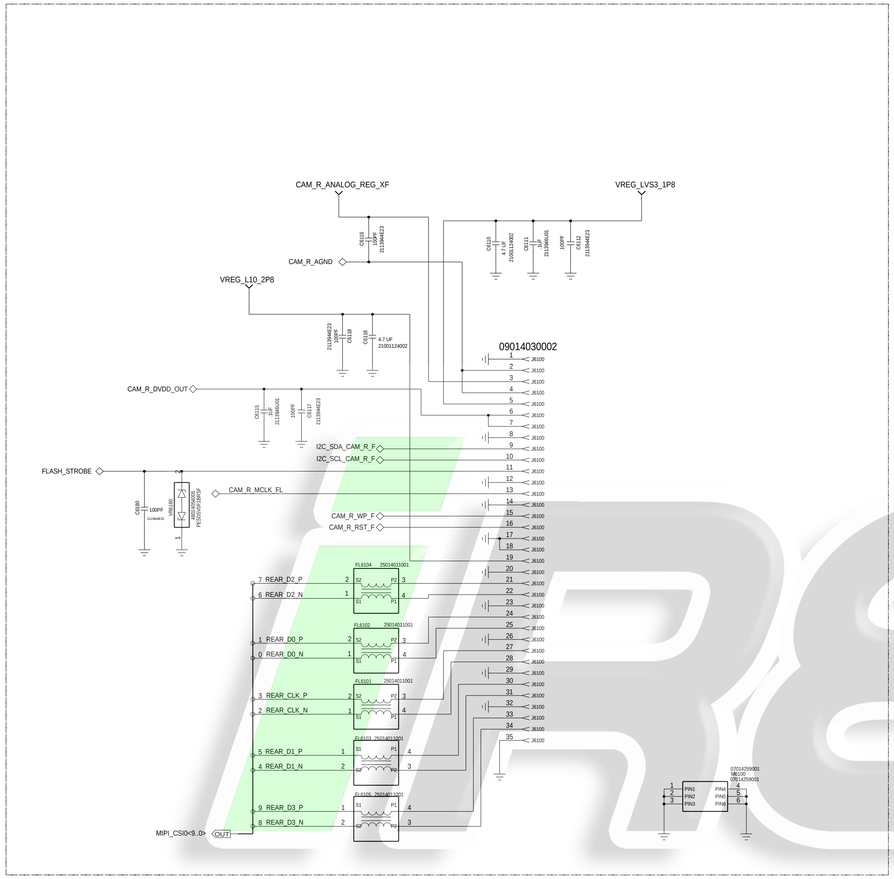

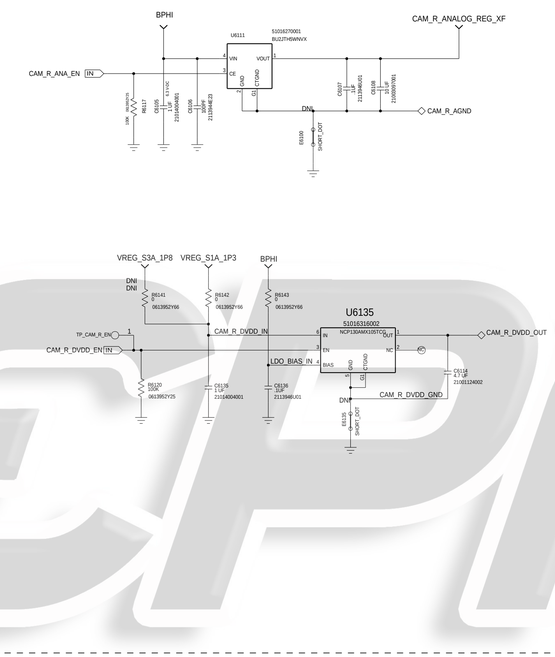

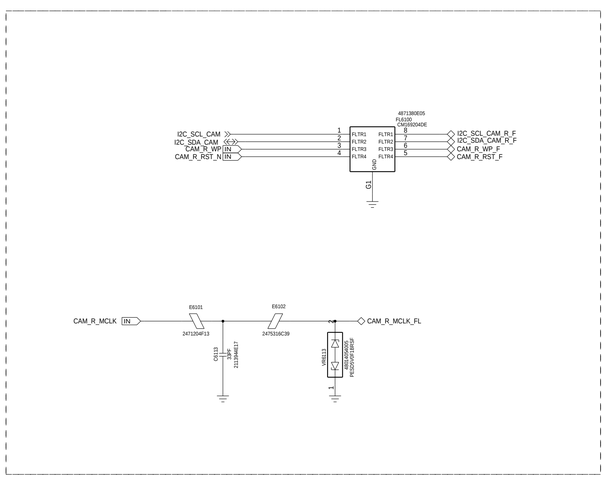

REPAIR

APPROVALS	MOTOROLA MOBILE DEVICES
ENGINEER: XFON TEAM	BLOCK TITLE: 84016292001_b
LAST MODIFIED BY: GIANCARLO M. Thu Jun 26 14:16:49 2014	
MOTOROLA CONFIDENTIAL RESTRICTED	D — PROJECT NAME: 84016292001_b.cpm — REV: 01
	CAD FILE NAME: — PAGE 16 OF 55

THE DRAWING ON THIS PRINT AND INFORMATION THEREWITH ARE PROPRIETARY TO MOTOROLA AND SHALL NOT BE USED OR DISCLOSED IN WHOLE OR IN PART WITHOUT MOTOROLA'S CONSENT. © COPYRIGHT, MOTOROLA. THIS DOES NOT IMPLY PUBLICATION.

REAR CAMERA FLASH

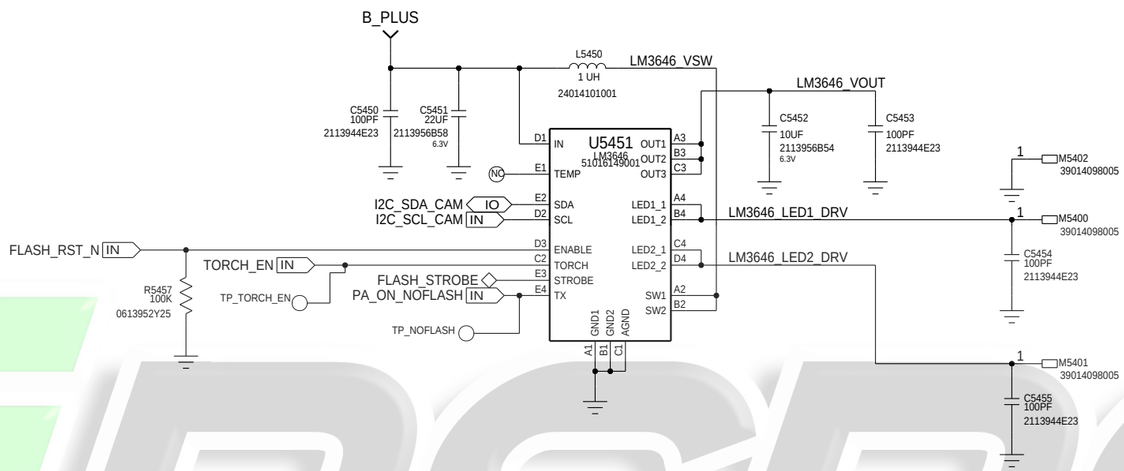

iREPAIR

APPROVALS	MOTOROLA MOBILE DEVICES
ENGINEER: CHRIS KANG	BLOCK TITLE: 84016292001_b
LAST MODIFIED BY: R. NG Thu Jun 26 14:16:55 2014	
MOTOROLA CONFIDENTIAL RESTRICTED	B — PROJECT NAME: 84016292001_b.cpm — REV: 01
THE DRAWING ON THIS PRINT AND INFORMATION THEREWITH ARE PROPRIETARY TO MOTOROLA AND SHALL NOT BE USED OR DISCUSSED IN WHOLE OR IN PART WITHOUT MOTOROLA'S CONSENT.	CAD FILE NAME:
© COPYRIGHT, MOTOROLA. THIS DOES NOT IMPLY PUBLICATION	PAGE 17 OF 55

FRONT CAMERA
REF 5600-5649

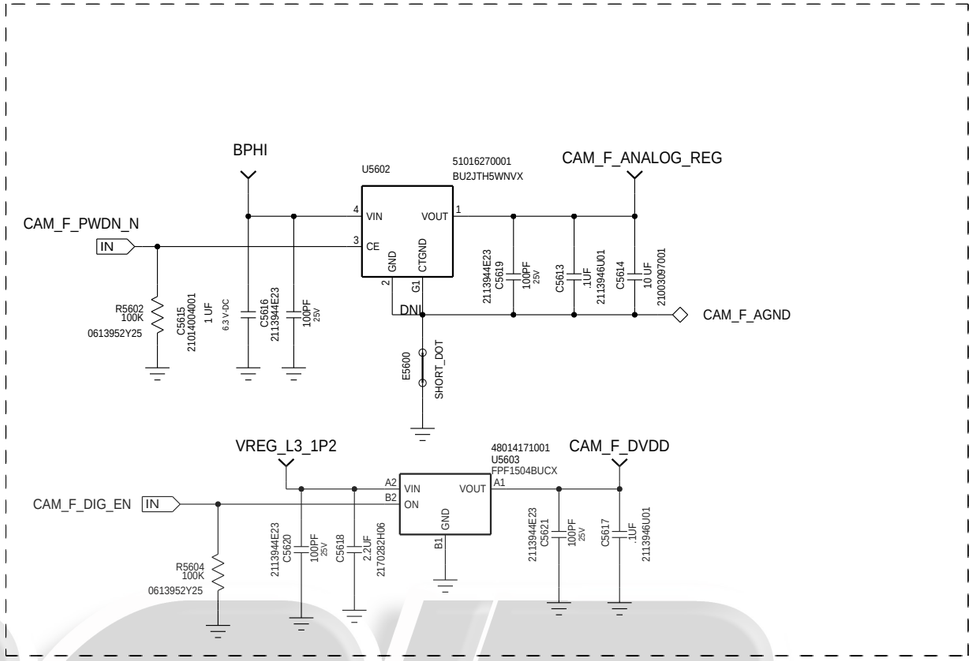

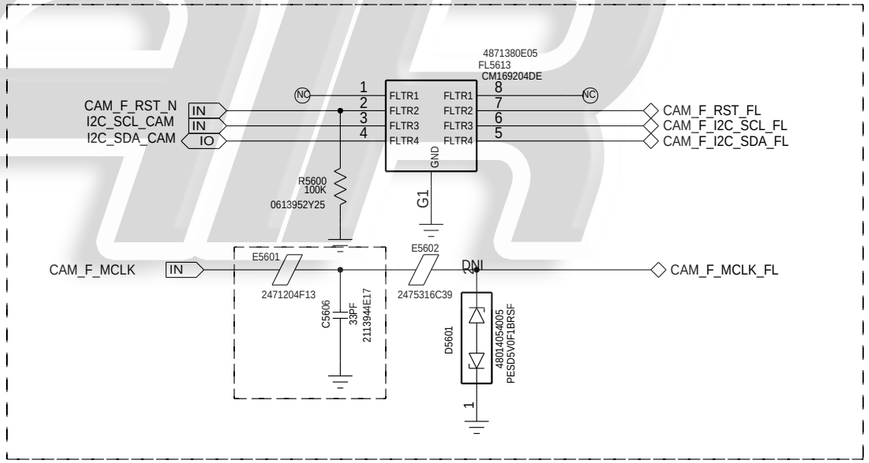

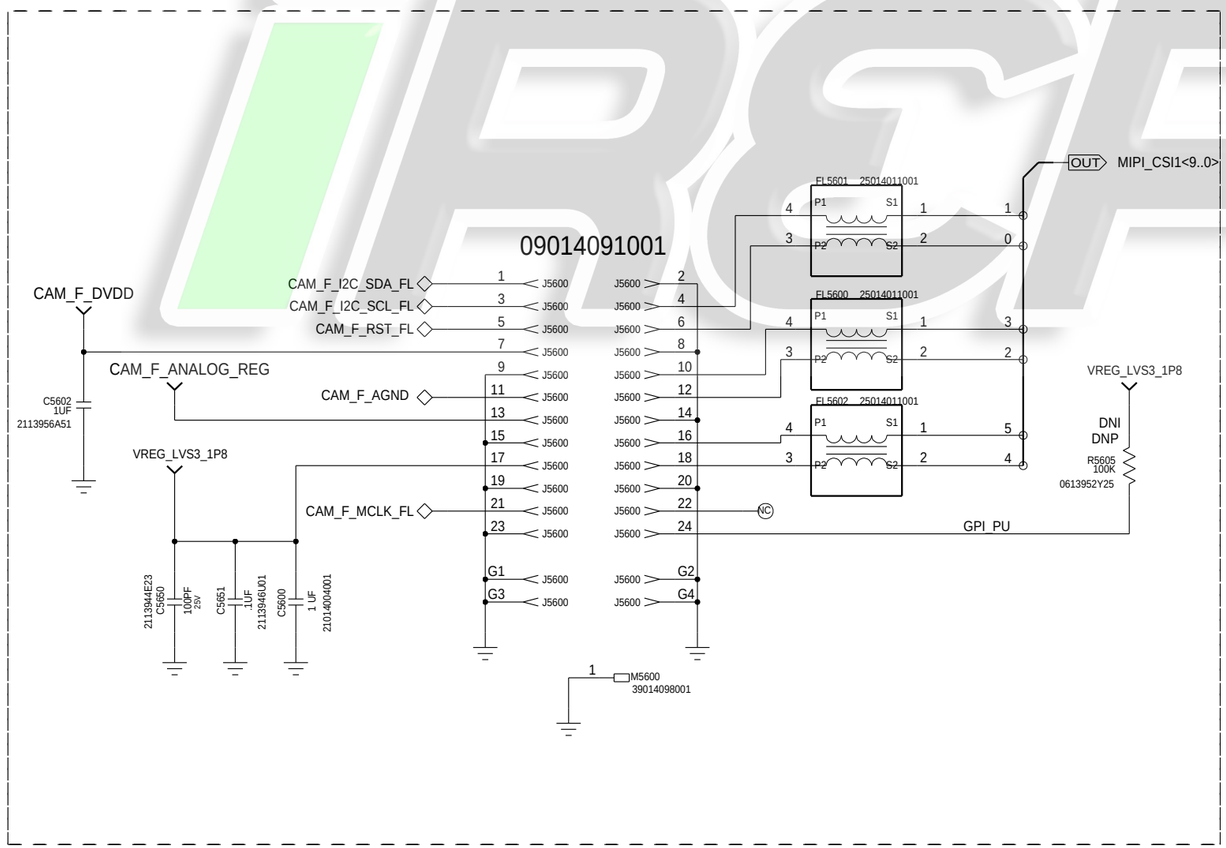

APPROVALS	MOTOROLA MOBILE DEVICES
ENGINEER: JOHN KRAMER	BLOCK TITLE: 84016292001_b
LAST MODIFIED BY: UID ELRAN Thu Jun 26 14:17:02 2014	
MOTOROLA CONFIDENTIAL RESTRICTED	B — PROJECT NAME: 84016292001_b.cpm — REV: 01
THE DRAWING ON THIS PRINT AND INFORMATION THEREWITH ARE PROPRIETARY TO MOTOROLA AND SHALL NOT BE USED OR DISCUSSED IN WHOLE OR IN PART WITHOUT MOTOROLA'S CONSENT. © COPYRIGHT, MOTOROLA. THIS DOES NOT IMPLY PUBLICATION	CAD FILE NAME: — PAGE 18 OF 55

iRepair

ALWAYS ON DISPLAY

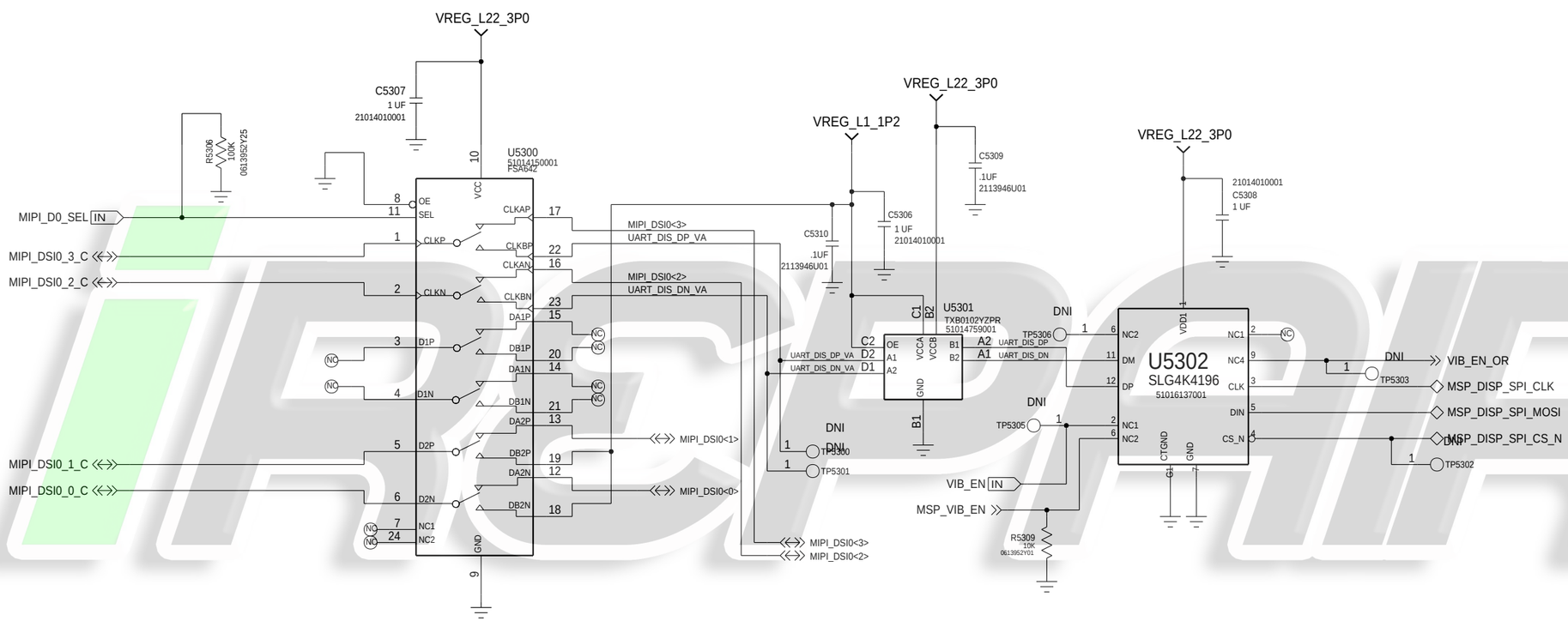

APPROVALS	MOTOROLA MOBILE DEVICES
ENGINEER: NATE CONNELL	BLOCK TITLE: 84016292001_b
LAST MODIFIED BY: NATE CONNELL Thu Jun 26 14:17:07 2014	
MOTOROLA CONFIDENTIAL RESTRICTED	B — PROJECT NAME: 84016292001_b.cpm — REV: 01
THE DRAWING ON THIS PRINT AND INFORMATION THEREWITH ARE PROPRIETARY TO MOTOROLA AND SHALL NOT BE USED OR DISCUSSED IN WHOLE OR IN PART WITHOUT MOTOROLA'S CONSENT. © COPYRIGHT, MOTOROLA. THIS DOES NOT IMPLY PUBLICATION	CAD FILE NAME:
	PAGE 19 OF 55

REVISIONS				
ZONE	LTR	DESCRIPTION	DATE	APPR.

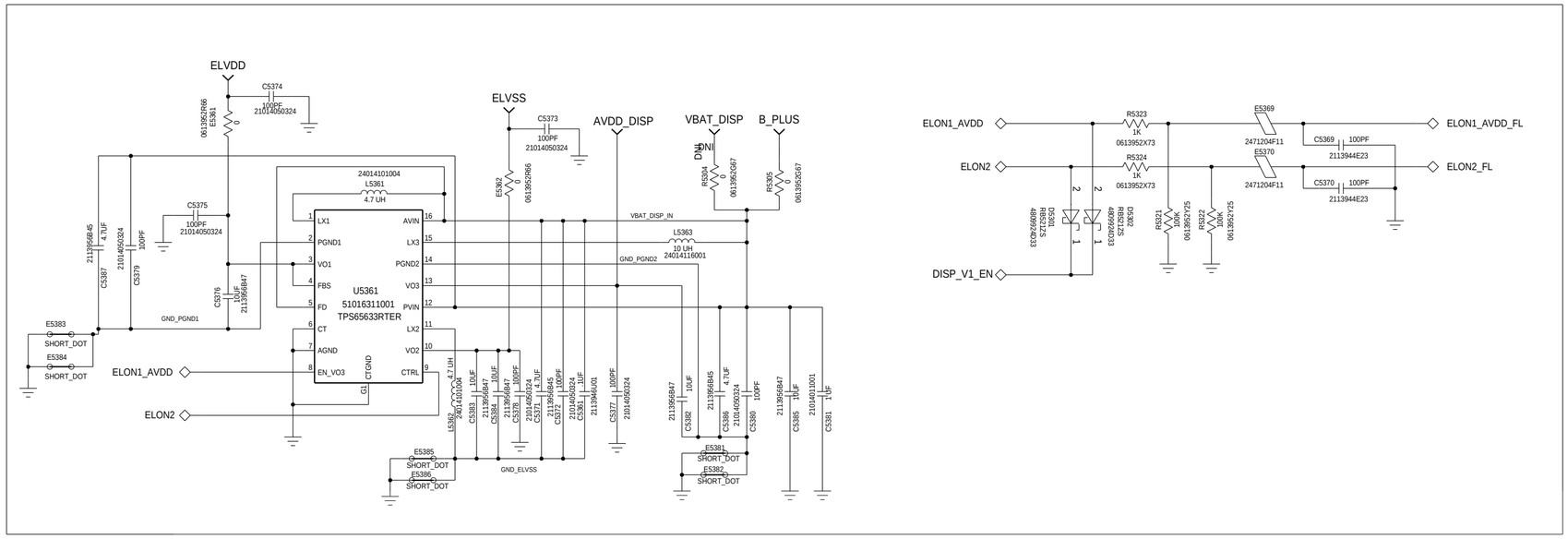

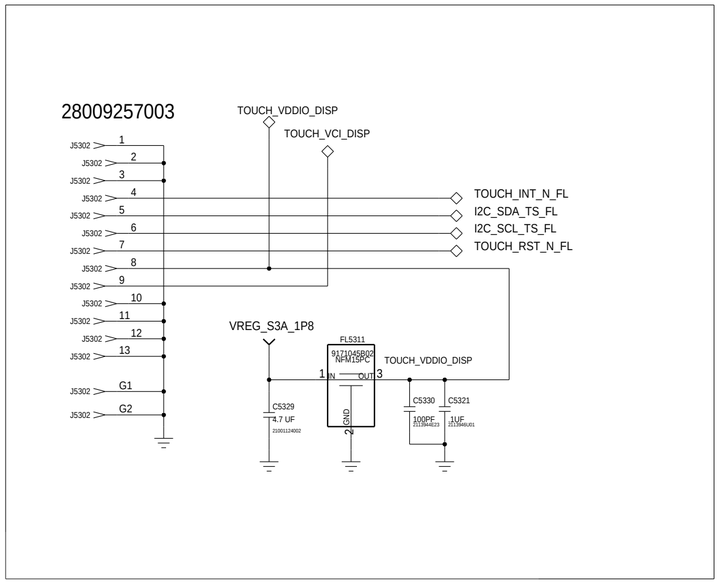

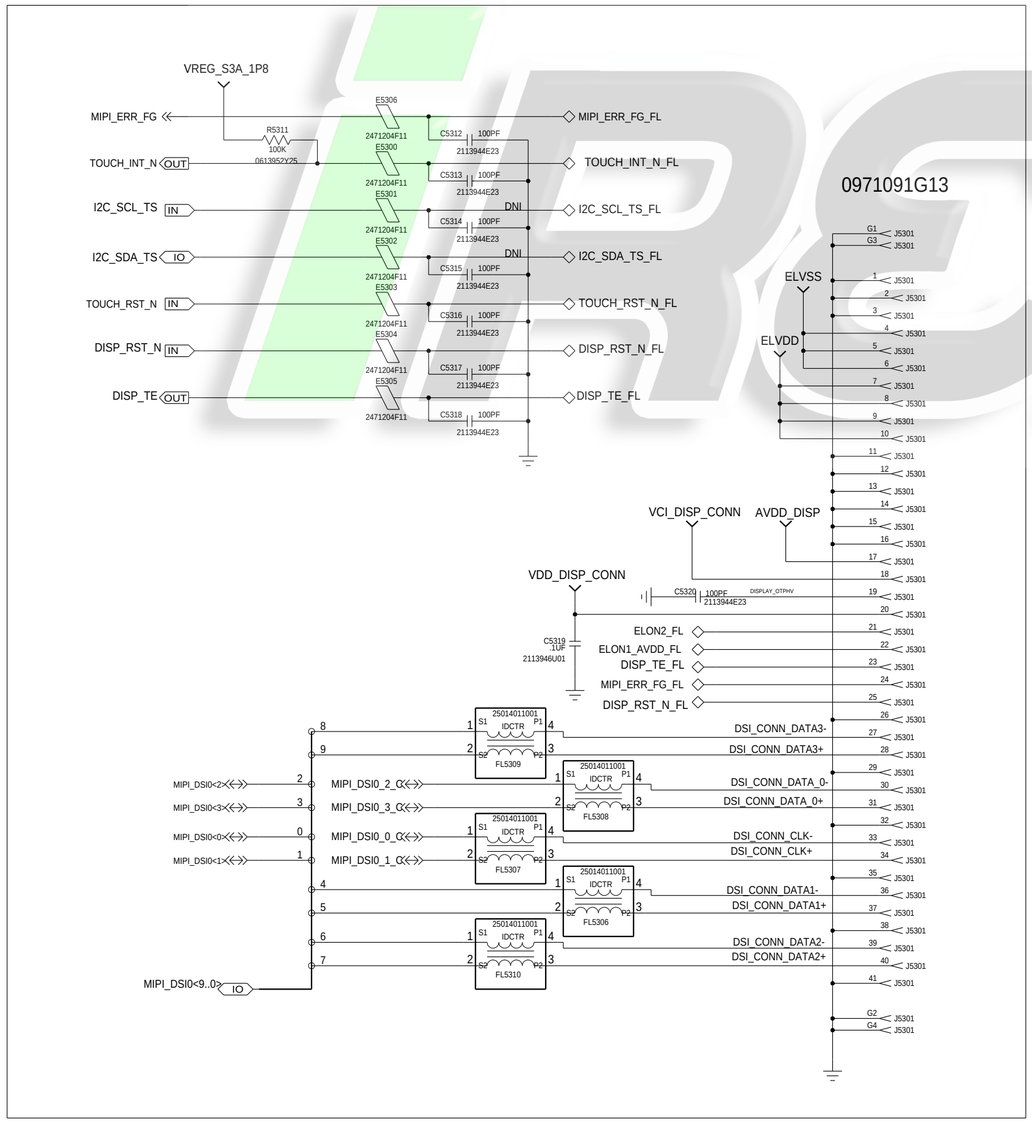

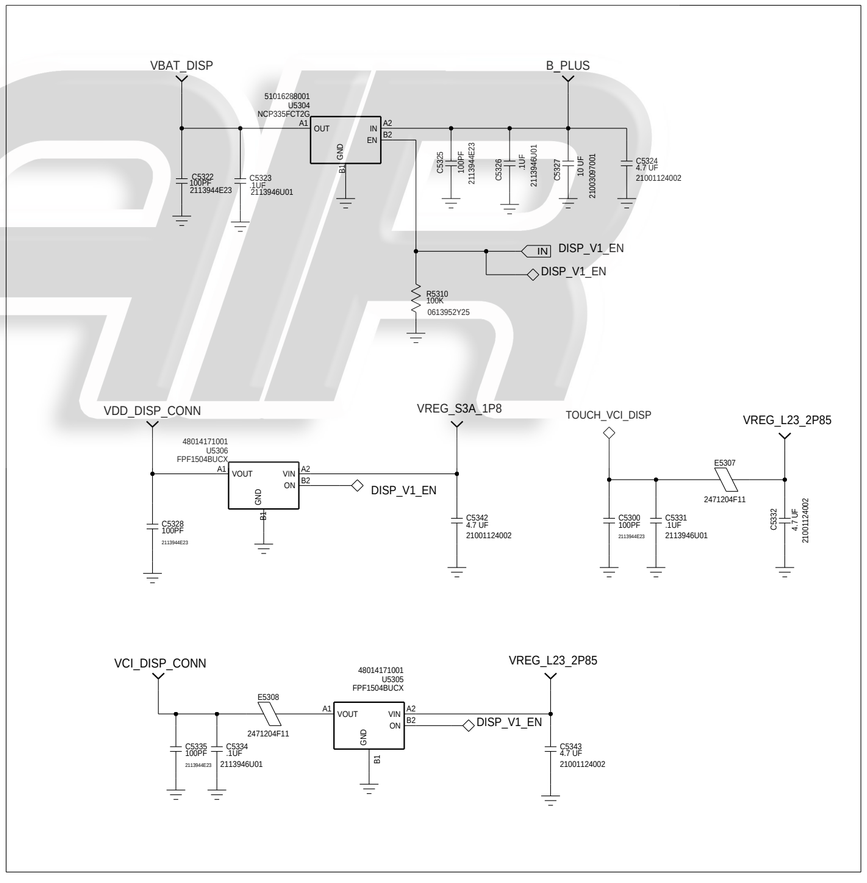

APPROVALS	MOTOROLA MOBILE DEVICES
ENGINEER: CHRIS KANG	BLOCK TITLE: 84016292001_b
LAST MODIFIED BY: CHRIS KANG Thu Jun 26 14:17:16 2014	
MOTOROLA CONFIDENTIAL RESTRICTED	C — PROJECT NAME: 84016292001_b.cpm — REV: 01
CAD FILE NAME:	PAGE 20 of 55

THE DRAWING ON THIS PRINT AND INFORMATION THEREWITH ARE PROPRIETARY TO MOTOROLA AND SHALL NOT BE USED OR DISCUSSED IN WHOLE OR IN PART WITHOUT MOTOROLA'S CONSENT.
© COPYRIGHT, MOTOROLA. THIS DOES NOT IMPLY PUBLICATION

NFC

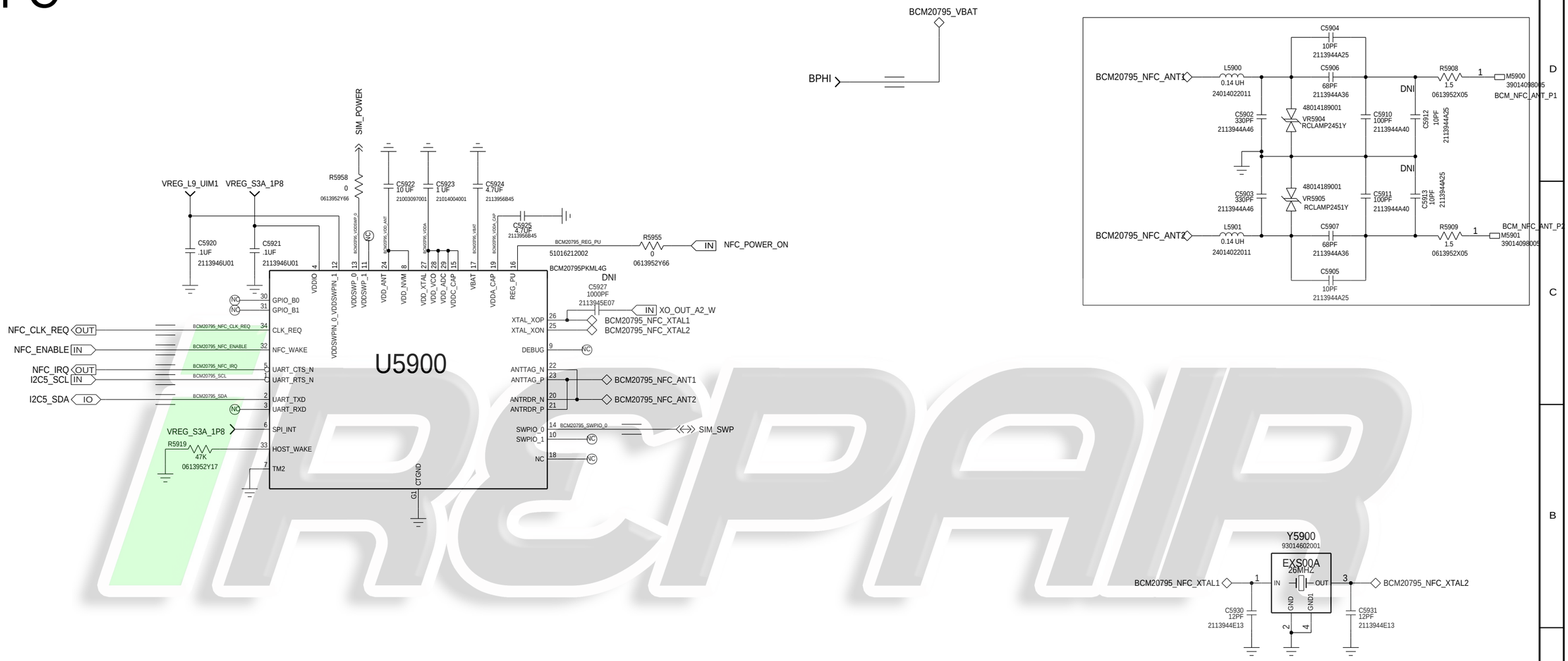

iREPAIR

APPROVALS	MOTOROLA MOBILE DEVICES
ENGINEER: FROEHLING	BLOCK TITLE: 84016292001_b
LAST MODIFIED BY: FROEHLING Thu Jun 26 14:17:22 2014	
MOTOROLA CONFIDENTIAL RESTRICTED	B — PROJECT NAME: 84016292001_b.cpm — REV: 01
	CAD FILE NAME: — PAGE 21 OF 55

THE DRAWING ON THIS PRINT AND INFORMATION THEREWITH ARE PROPRIETARY TO MOTOROLA AND SHALL NOT BE USED OR DISCUSSED IN WHOLE OR IN PART WITHOUT MOTOROLA'S CONSENT.
© COPYRIGHT, MOTOROLA. THIS DOES NOT IMPLY PUBLICATION

MSM8974 CTRL/ANALOG/JTAG

REF 1000-1099

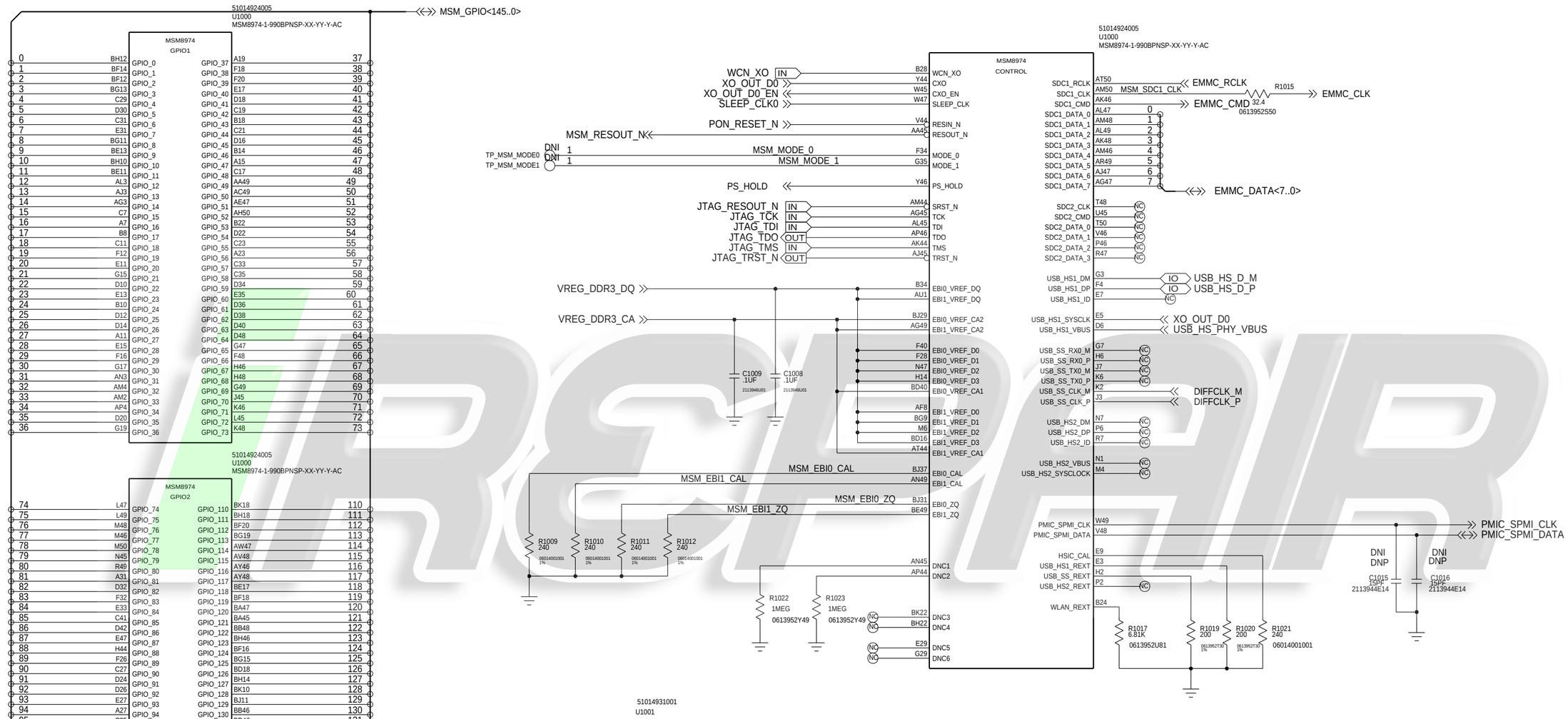

APPROVALS	MOTOROLA MOBILE DEVICES
ENGINEER:	BLOCK TITLE: 84016292001_b
LAST MODIFIED BY: Thu Jun 26 14:17:30 2014	
MOTOROLA CONFIDENTIAL RESTRICTED	B — PROJECT NAME: 84016292001_b.cpm — REV: 01
THE DRAWING ON THIS PRINT AND INFORMATION THEREWITH ARE PROPRIETARY TO MOTOROLA AND SHALL NOT BE USED OR DISCUSSED IN WHOLE OR IN PART WITHOUT MOTOROLA'S CONSENT. © COPYRIGHT, MOTOROLA. THIS DOES NOT IMPLY PUBLICATION	CAD FILE NAME:

MSM8974 GPIO

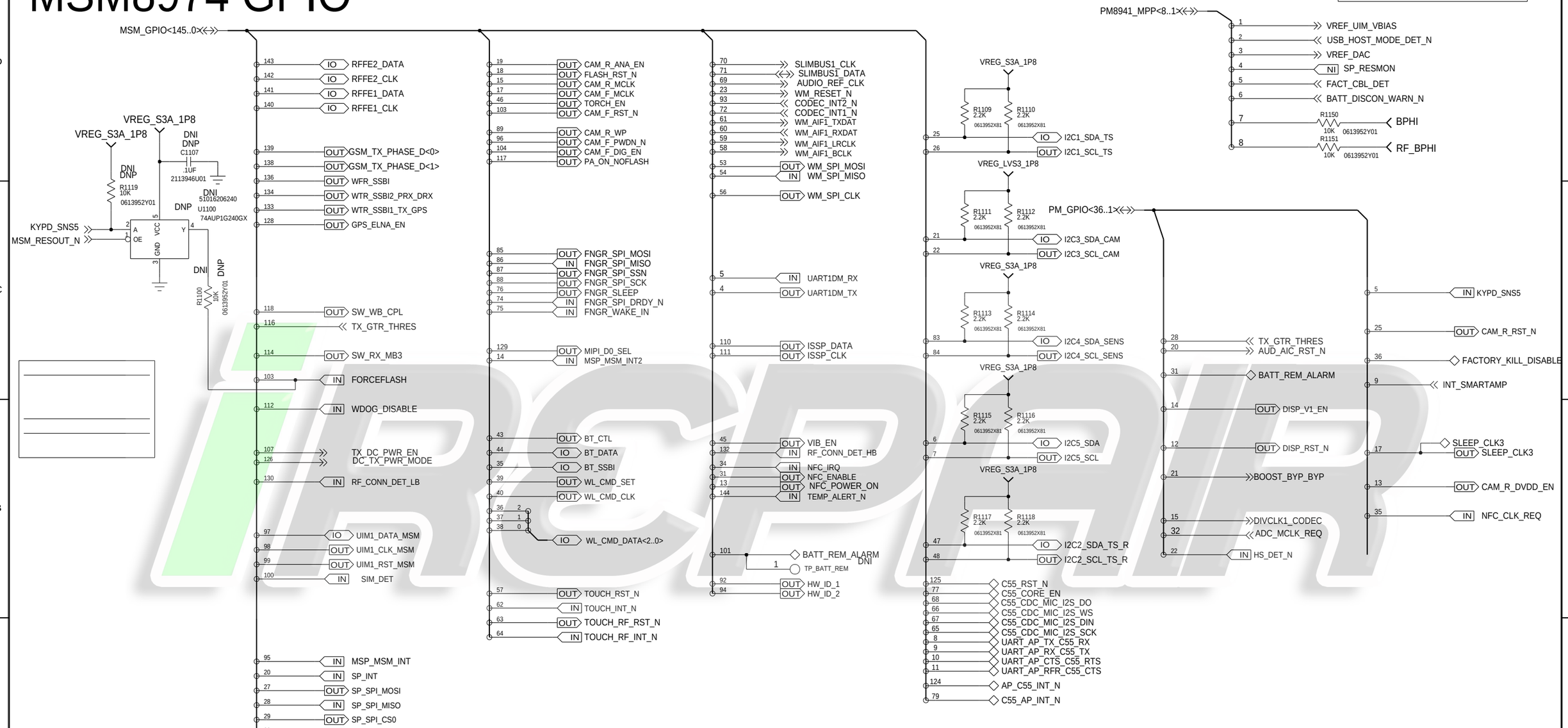

APPROVALS	MOTOROLA MOBILE DEVICES	
ENGINEER:	BLOCK TITLE: 84016292001_b	
LAST MODIFIED BY: TIM MILLER Thu Jun 26 14:17:38 2014		
MOTOROLA CONFIDENTIAL RESTRICTED THE DRAWING ON THIS PRINT AND INFORMATION THEREWITH ARE PROPRIETARY TO MOTOROLA AND SHALL NOT BE USED OR DISCUSSED IN WHOLE OR IN PART WITHOUT MOTOROLA'S CONSENT. © COPYRIGHT, MOTOROLA. THIS DOES NOT IMPLY PUBLICATION	B PROJECT NAME 84016292001_b.cpm	REV 01
	CAD FILE NAME:	PAGE 23 OF 55

MSM8974 MIPI/HDMI/RF

REF 1200-1299

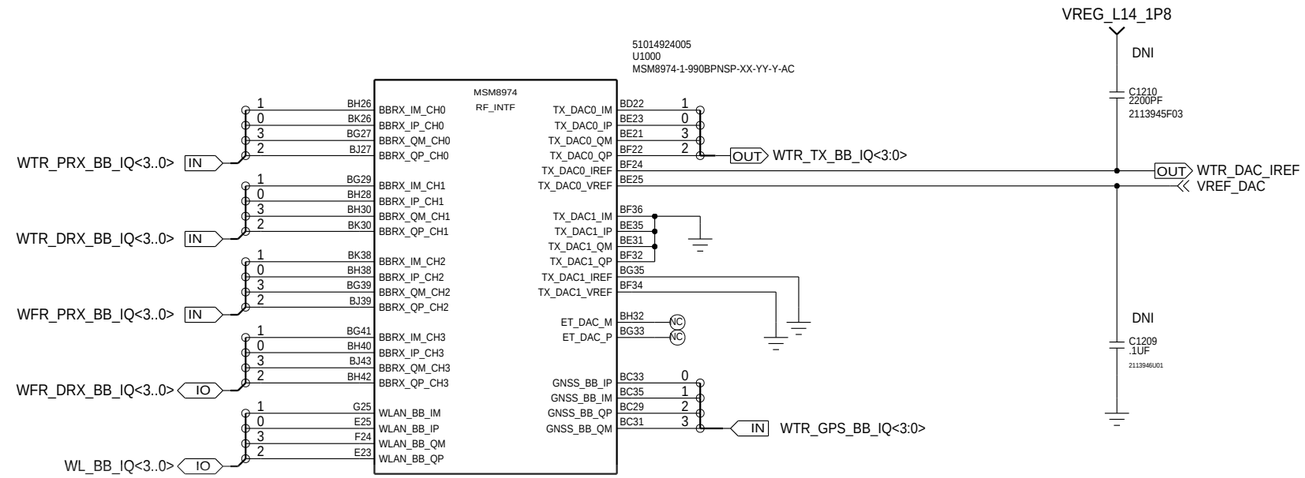

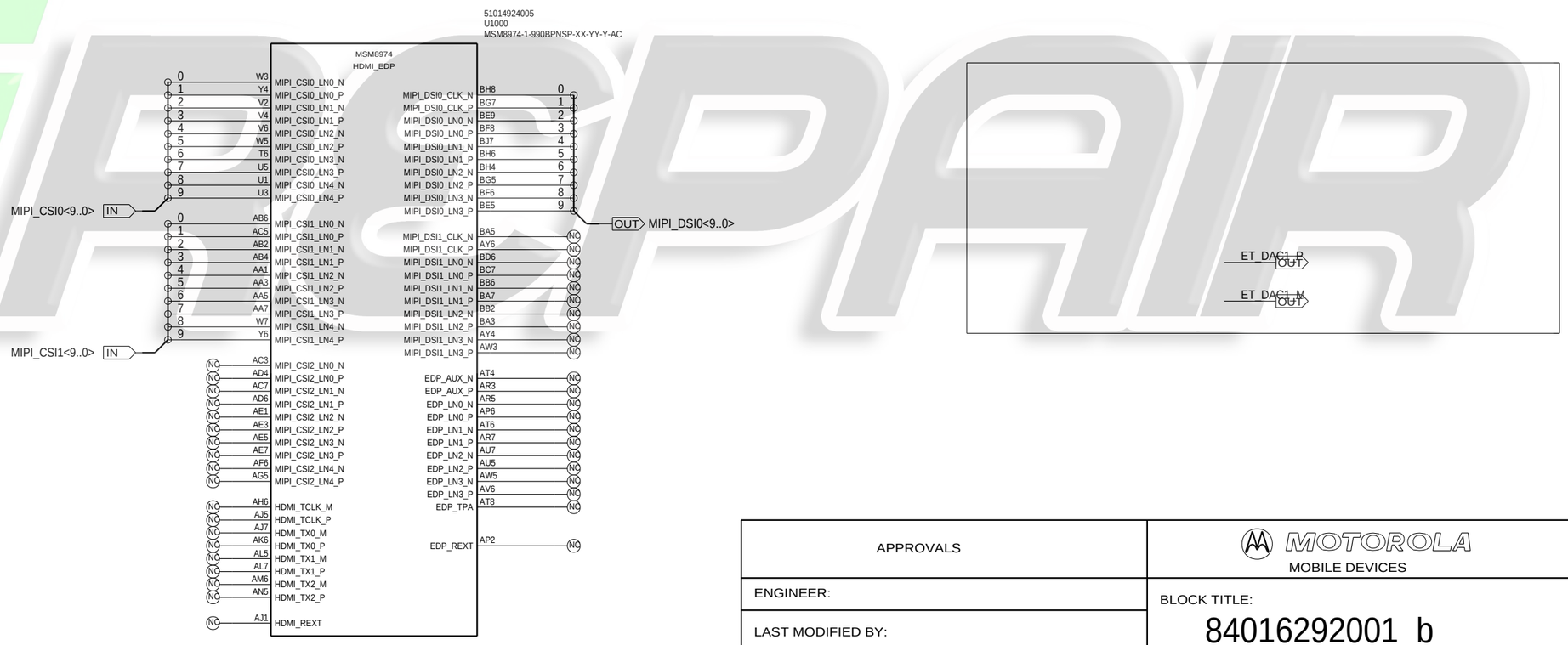

APPROVALS	MOTOROLA MOBILE DEVICES
ENGINEER:	BLOCK TITLE: 84016292001_b
LAST MODIFIED BY: Thu Jun 26 14:17:45 2014	
MOTOROLA CONFIDENTIAL RESTRICTED	B — PROJECT NAME: 84016292001_b.cpm — REV: 01
THE DRAWING ON THIS PRINT AND INFORMATION THEREWITH ARE PROPRIETARY TO MOTOROLA AND SHALL NOT BE USED OR DISCUSSED IN WHOLE OR IN PART WITHOUT MOTOROLA'S CONSENT. © COPYRIGHT, MOTOROLA. THIS DOES NOT IMPLY PUBLICATION	CAD FILE NAME: — PAGE 24 OF 55

iRepair

MSM8974 POWER 1

REF 1300-1399

REVISIONS				
ZONE	LTR	DESCRIPTION	DATE	APPROVED

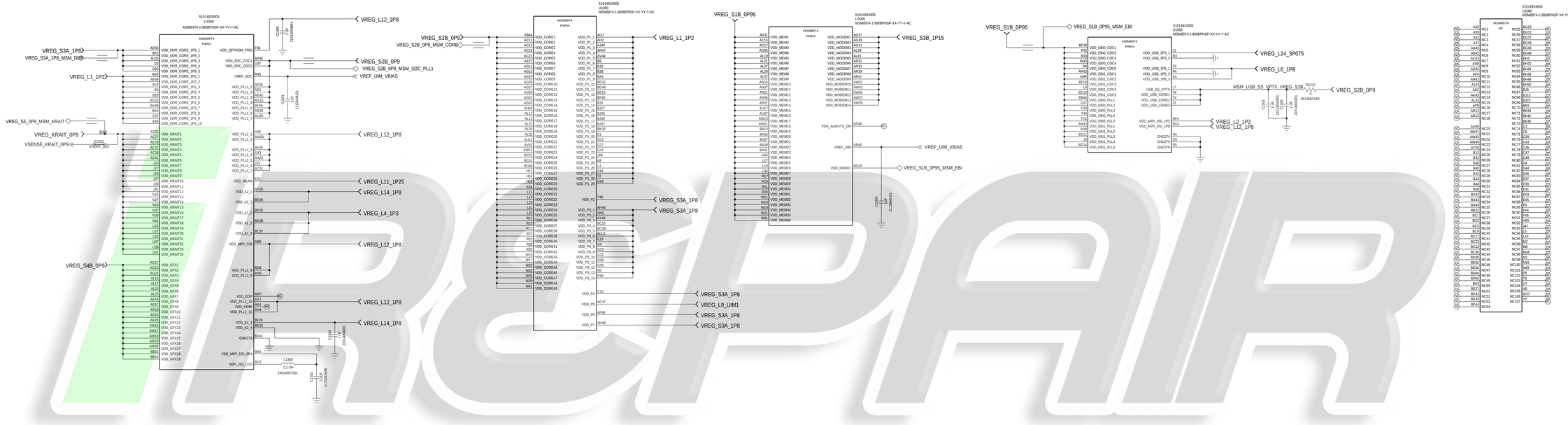

APPROVALS	MOTOROLA MOBILE DEVICES
ENGINEER:	BLOCK TITLE: 84016292001_b
LAST MODIFIED BY: Thu Jun 26 14:17:52 2014	
MOTOROLA CONFIDENTIAL RESTRICTED	D — PROJECT NAME: 84016292001_b.cpm — REV: 01
	CAD FILE NAME: — PAGE 25 OF 55

THE DRAWING ON THIS PRINT AND INFORMATION THEREWITH ARE PROPRIETARY TO MOTOROLA AND SHALL NOT BE USED OR DISCLOSED IN WHOLE OR IN PART WITHOUT MOTOROLA'S CONSENT. © COPYRIGHT, MOTOROLA. THIS DOES NOT IMPLY PUBLICATION.

MSM8974 POWER 2

REF 1400-1499

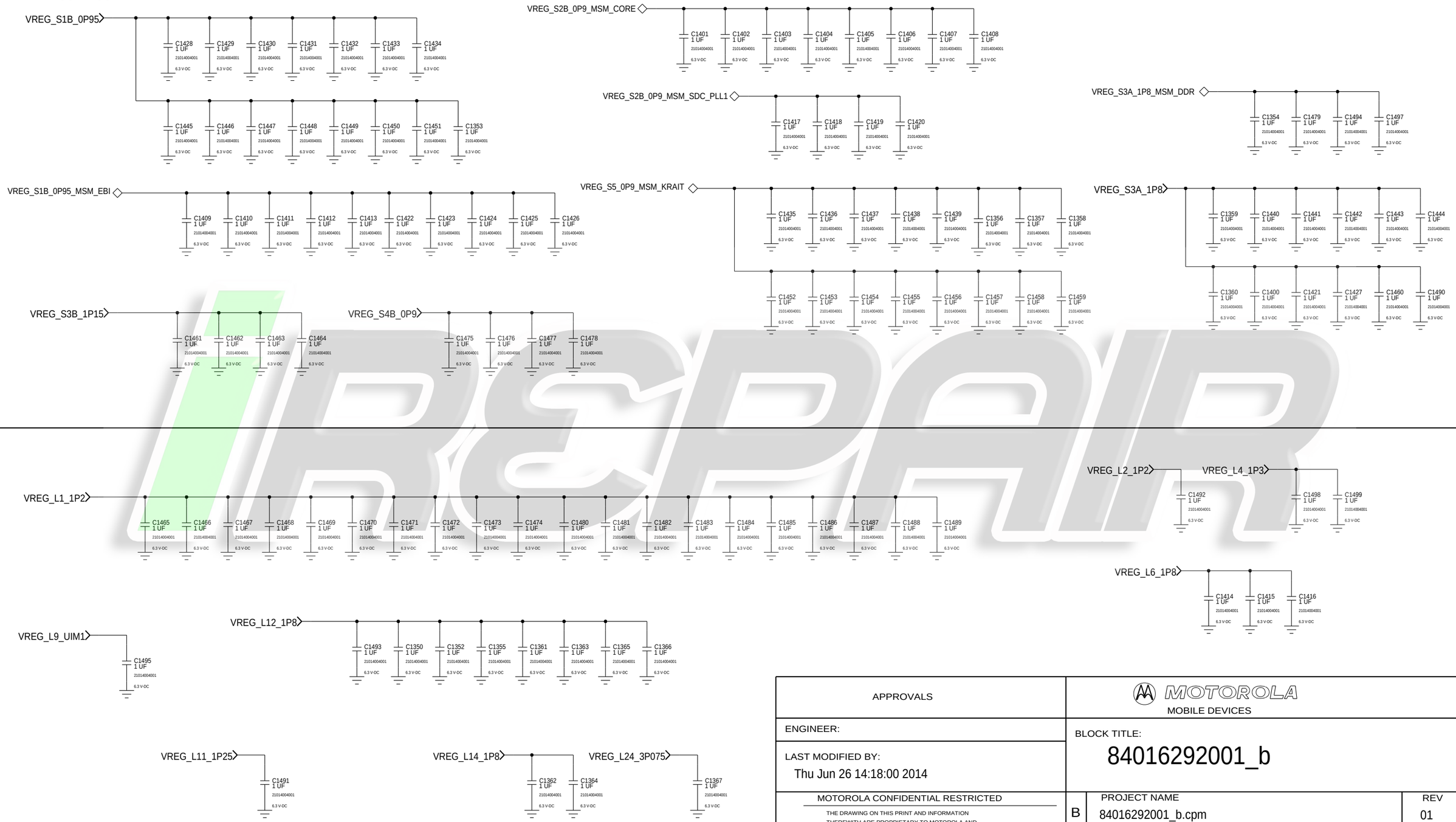

APPROVALS	MOTOROLA MOBILE DEVICES
ENGINEER:	BLOCK TITLE: 84016292001_b
LAST MODIFIED BY: Thu Jun 26 14:18:00 2014	
MOTOROLA CONFIDENTIAL RESTRICTED	B — PROJECT NAME: 84016292001_b.cpm — REV: 01
THE DRAWING ON THIS PRINT AND INFORMATION THEREWITH ARE PROPRIETARY TO MOTOROLA AND SHALL NOT BE USED OR DISCUSSED IN WHOLE OR IN PART WITHOUT MOTOROLA'S CONSENT.	CAD FILE NAME:
© COPYRIGHT, MOTOROLA. THIS DOES NOT IMPLY PUBLICATION	PAGE 26 OF 55

IRSDOIR

MSM8974 GROUND

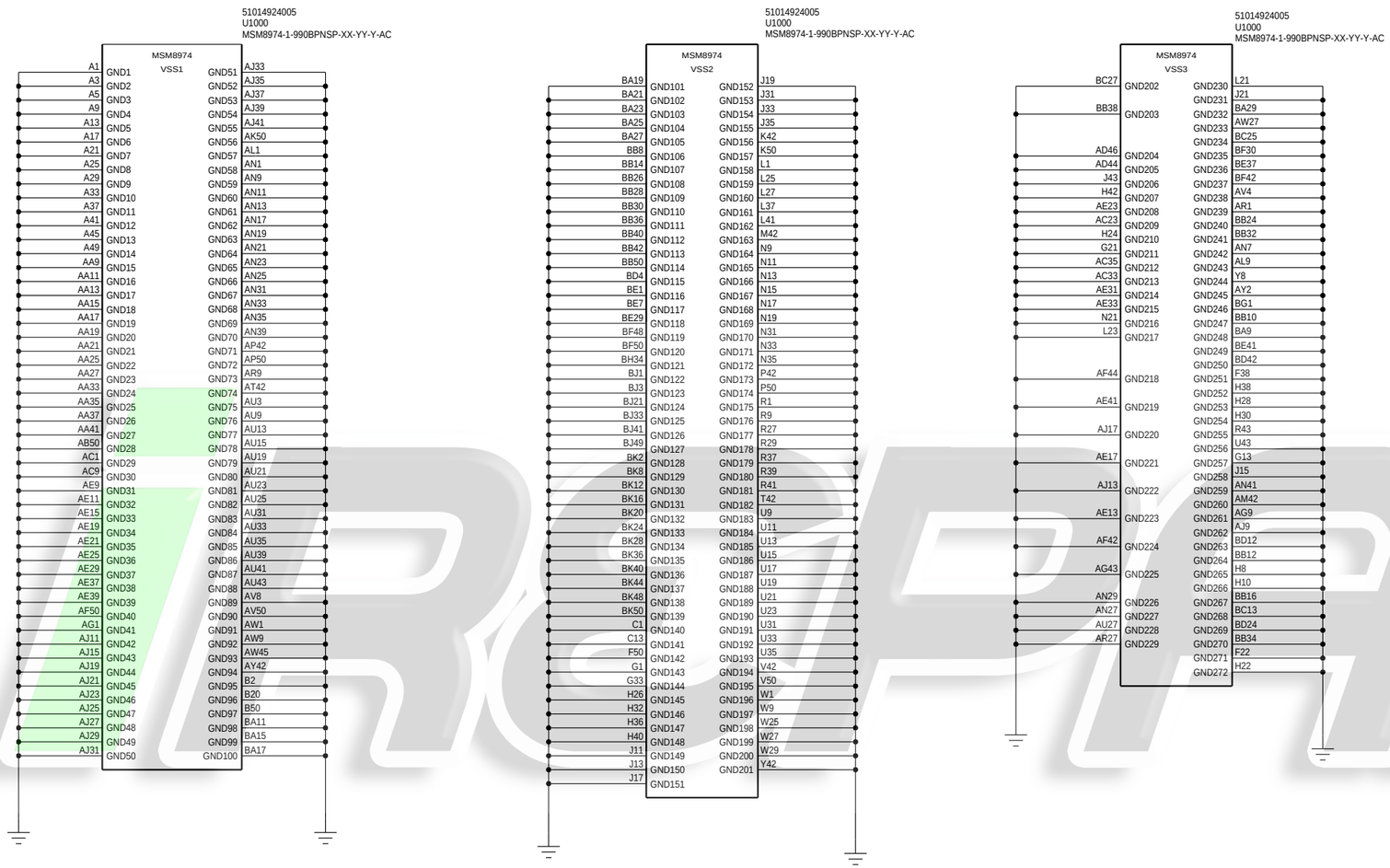

REPAIR

APPROVALS	MOTOROLA MOBILE DEVICES	
ENGINEER:	BLOCK TITLE: 84016292001_b	
LAST MODIFIED BY: Thu Jun 26 14:18:07 2014		
MOTOROLA CONFIDENTIAL RESTRICTED	B	PROJECT NAME: 84016292001_b.cpm — REV: 01
THE DRAWING ON THIS PRINT AND INFORMATION THEREWITH ARE PROPRIETARY TO MOTOROLA AND SHALL NOT BE USED OR DISCUSSED IN WHOLE OR IN PART WITHOUT MOTOROLA'S CONSENT.	CAD FILE NAME:	PAGE 27 OF 55

© COPYRIGHT, MOTOROLA. THIS DOES NOT IMPLY PUBLICATION

WCD9320 PORTS

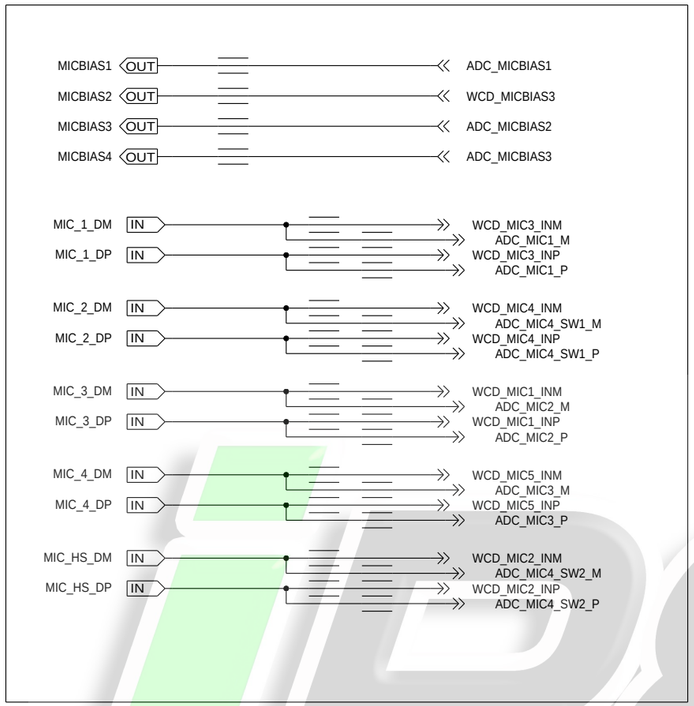

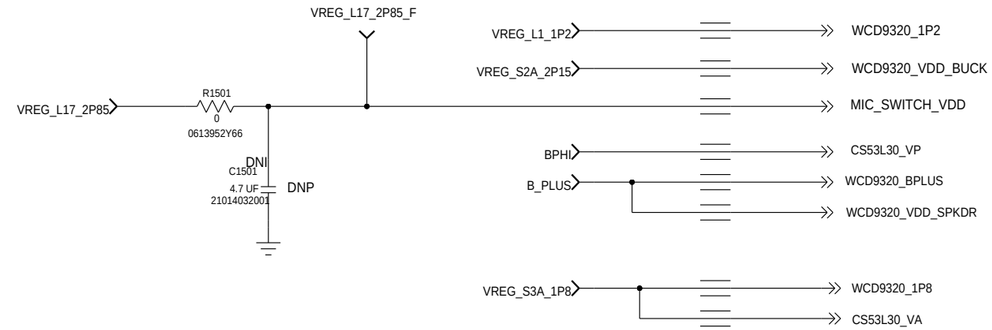

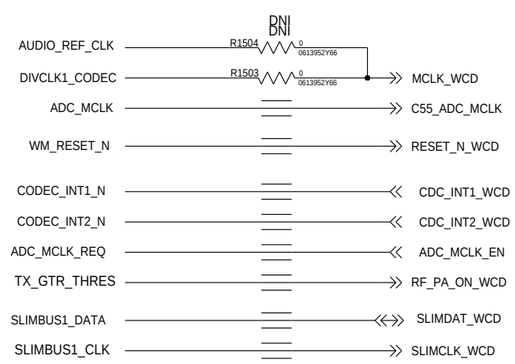

iRepair

APPROVALS	MOTOROLA MOBILE DEVICES	
ENGINEER:	BLOCK TITLE: 84016292001_b	
LAST MODIFIED BY: Thu Jun 26 14:18:12 2014		
MOTOROLA CONFIDENTIAL RESTRICTED	B	PROJECT NAME 84016292001_b.cpm	REV 01
THE DRAWING ON THIS PRINT AND INFORMATION THEREWITH ARE PROPRIETARY TO MOTOROLA AND SHALL NOT BE USED OR DISCUSSED IN WHOLE OR IN PART WITHOUT MOTOROLA'S CONSENT. © COPYRIGHT, MOTOROLA. THIS DOES NOT IMPLY PUBLICATION	CAD FILE NAME:	PAGE 28 OF 55

WCD9320

REF: 1550-1599

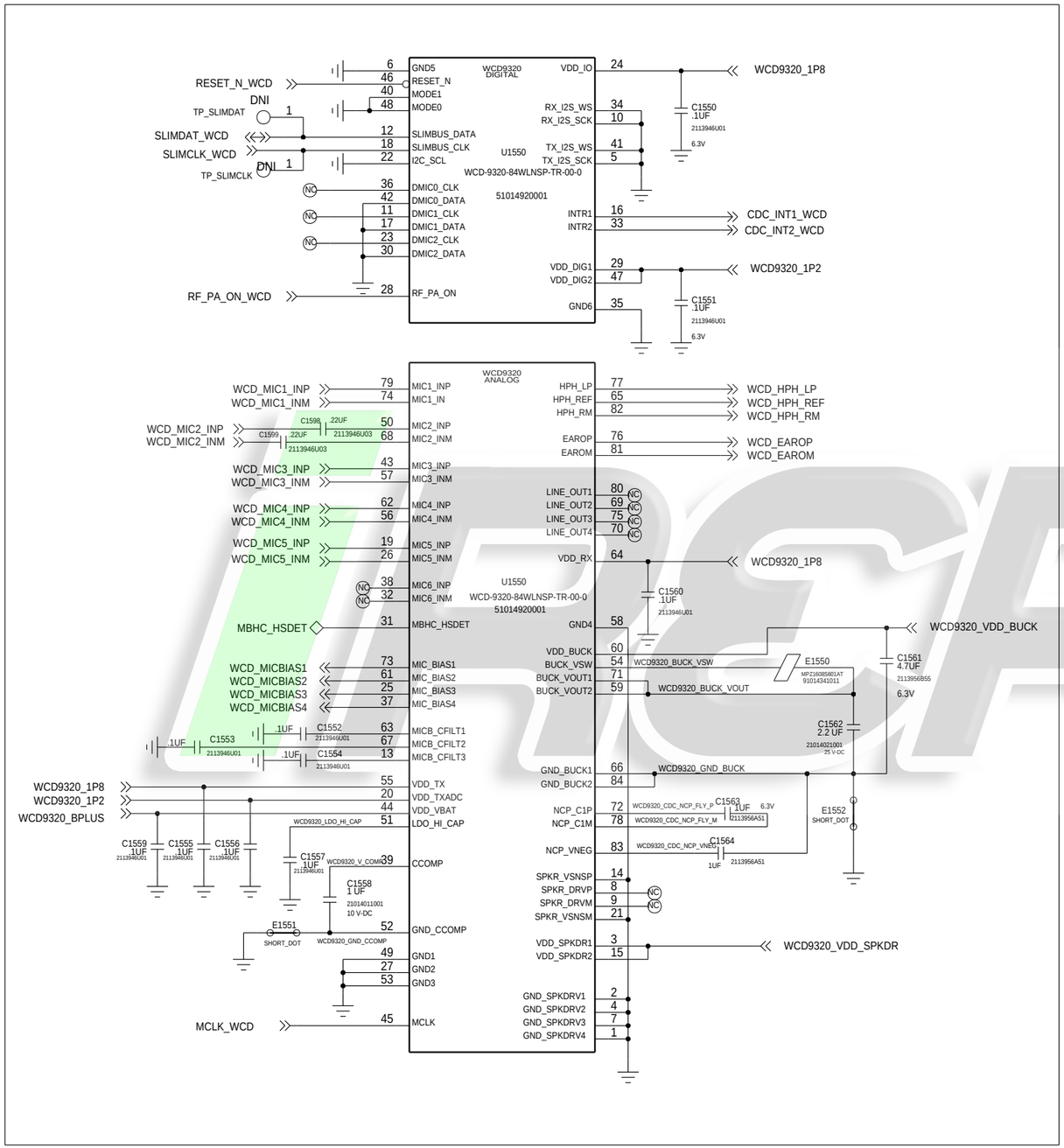

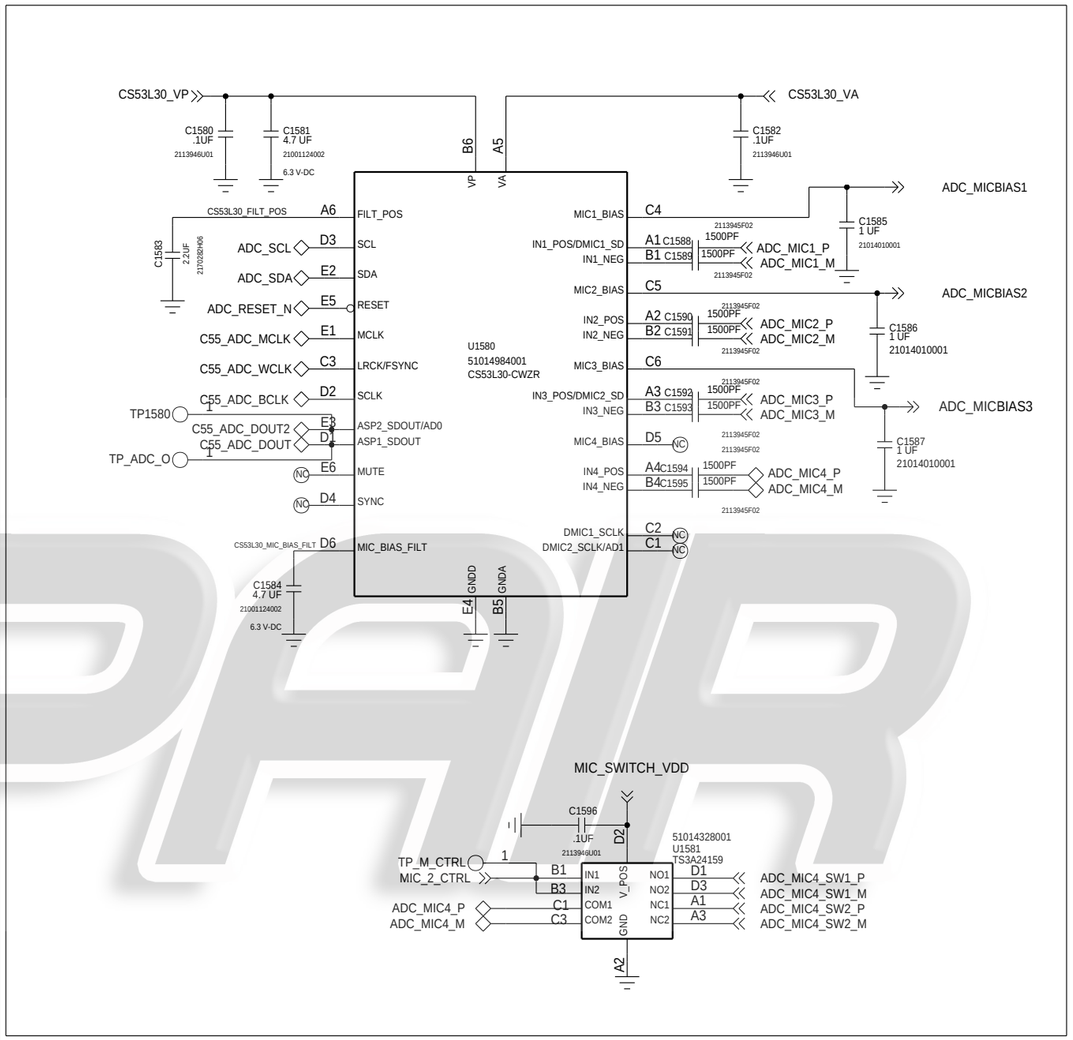

APPROVALS	MOTOROLA MOBILE DEVICES	
ENGINEER:	BLOCK TITLE: 84016292001_b	
LAST MODIFIED BY: Thu Jun 26 14:18:19 2014		
MOTOROLA CONFIDENTIAL RESTRICTED	B	PROJECT NAME: 84016292001_b.cpm — REV: 01
THE DRAWING ON THIS PRINT AND INFORMATION THEREWITH ARE PROPRIETARY TO MOTOROLA AND SHALL NOT BE USED OR DISCUSSED IN WHOLE OR IN PART WITHOUT MOTOROLA'S CONSENT. © COPYRIGHT, MOTOROLA. THIS DOES NOT IMPLY PUBLICATION	CAD FILE NAME:	PAGE 29 OF 55

mobiledip

LOW POWER AUDIO

REF 1800-1899

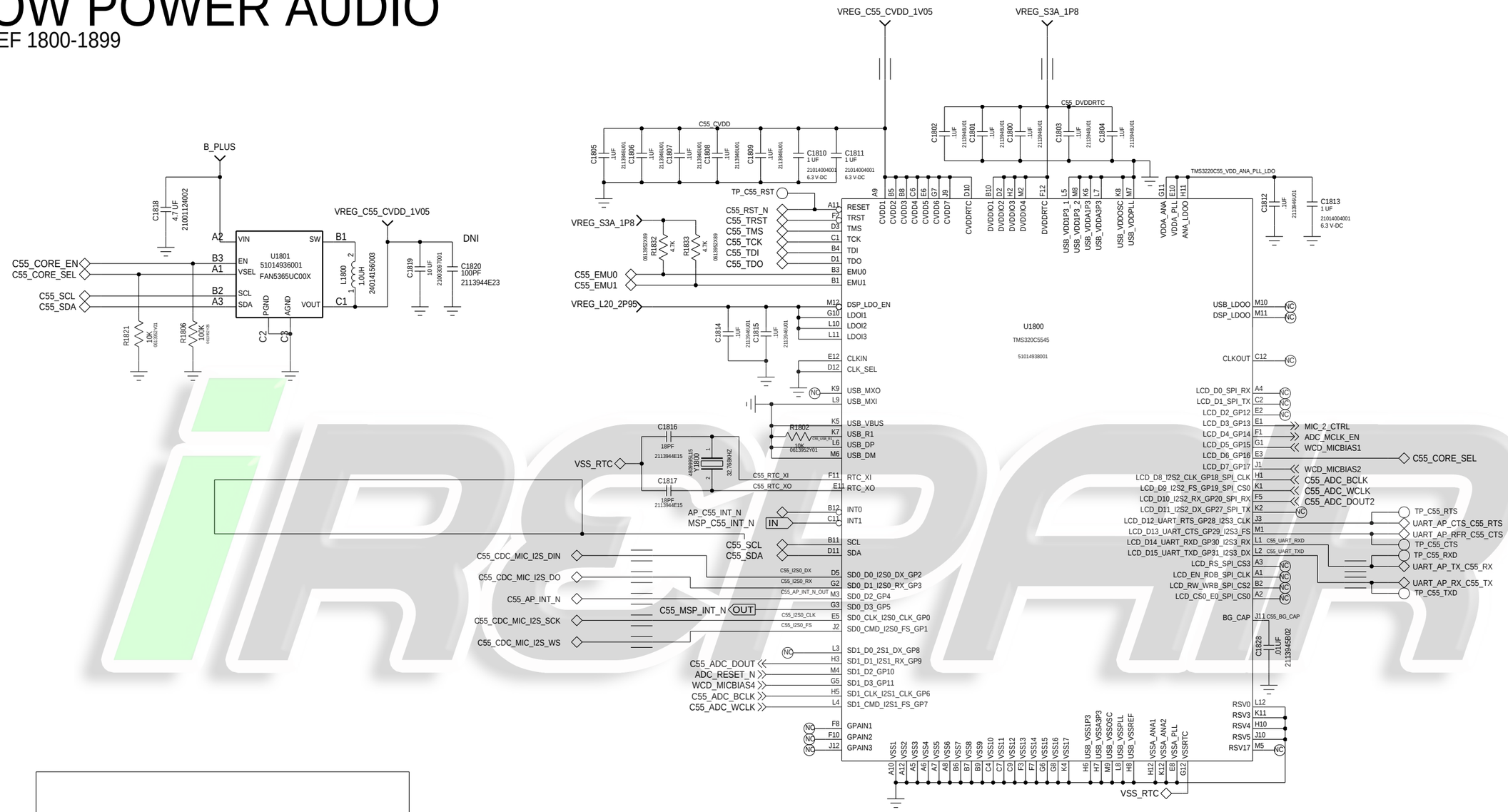

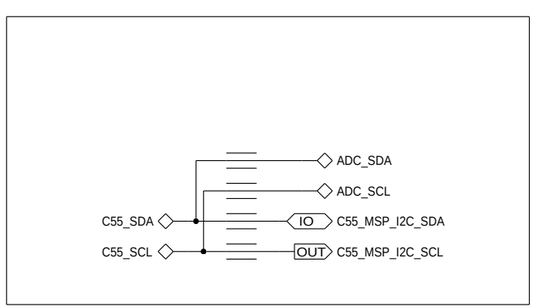

APPROVALS	MOTOROLA MOBILE DEVICES
ENGINEER:	BLOCK TITLE: 84016292001_b
LAST MODIFIED BY: Thu Jun 26 14:18:26 2014	
MOTOROLA CONFIDENTIAL RESTRICTED	B — PROJECT NAME: 84016292001_b.cpm — REV: 01
THE DRAWING ON THIS PRINT AND INFORMATION THEREWITH ARE PROPRIETARY TO MOTOROLA AND SHALL NOT BE USED OR DISCUSSED IN WHOLE OR IN PART WITHOUT MOTOROLA'S CONSENT. © COPYRIGHT, MOTOROLA. THIS DOES NOT IMPLY PUBLICATION	CAD FILE NAME: — PAGE 30 OF 55

iRepair

LOUD SPEAKER AMPS

REF 1900-1999

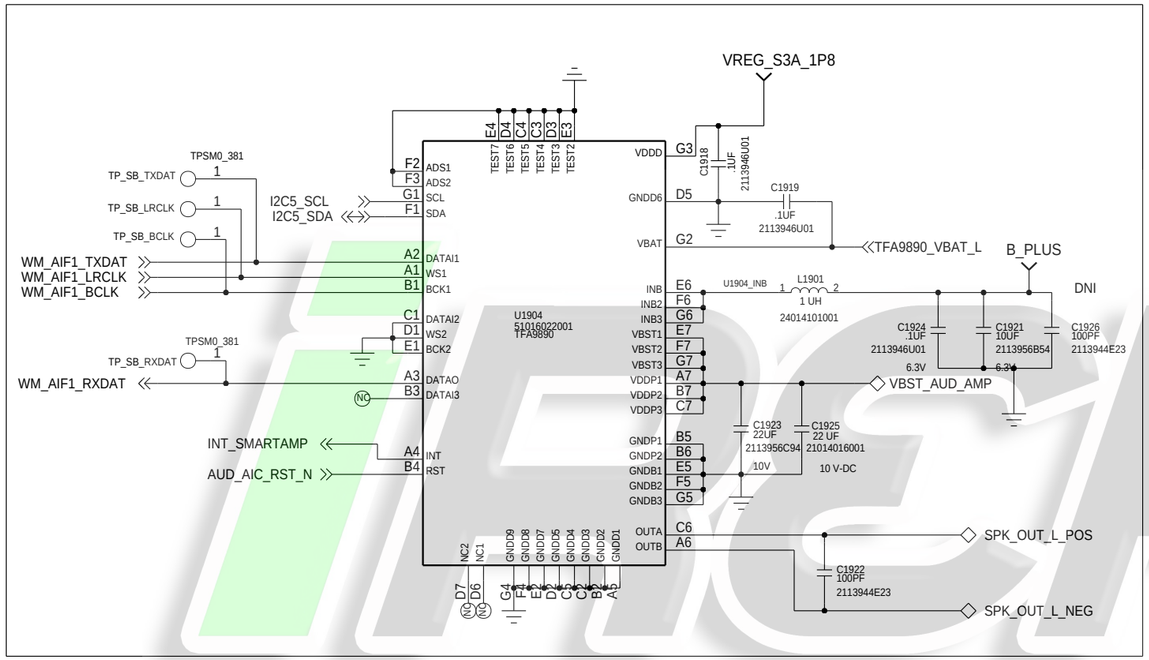

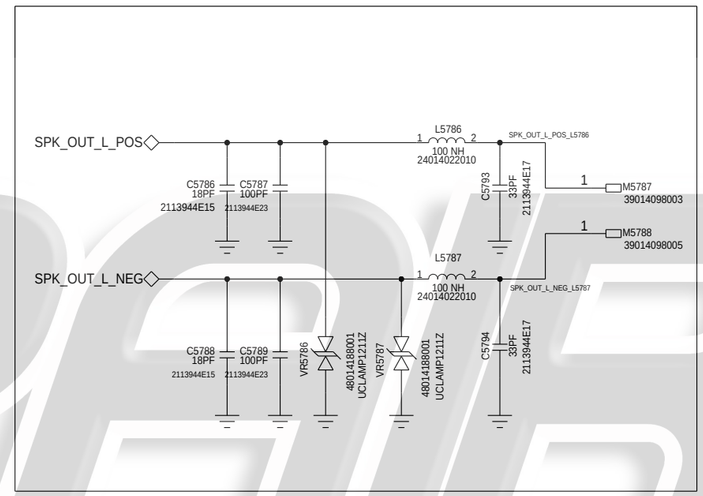

APPROVALS	MOTOROLA MOBILE DEVICES	
ENGINEER:	BLOCK TITLE: 84016292001_b	
LAST MODIFIED BY: Thu Jun 26 14:18:33 2014		
MOTOROLA CONFIDENTIAL RESTRICTED	B — PROJECT NAME: 84016292001_b.cpm	REV: 01
THE DRAWING ON THIS PRINT AND INFORMATION THEREWITH ARE PROPRIETARY TO MOTOROLA AND SHALL NOT BE USED OR DISCUSSED IN WHOLE OR IN PART WITHOUT MOTOROLA'S CONSENT. © COPYRIGHT, MOTOROLA. THIS DOES NOT IMPLY PUBLICATION	CAD FILE NAME:	PAGE 31 OF 55

iFIXPIER

EMMC

REF 1600-1699

REVISIONS				
ZONE	LTR	DESCRIPTION	DATE	APPR.

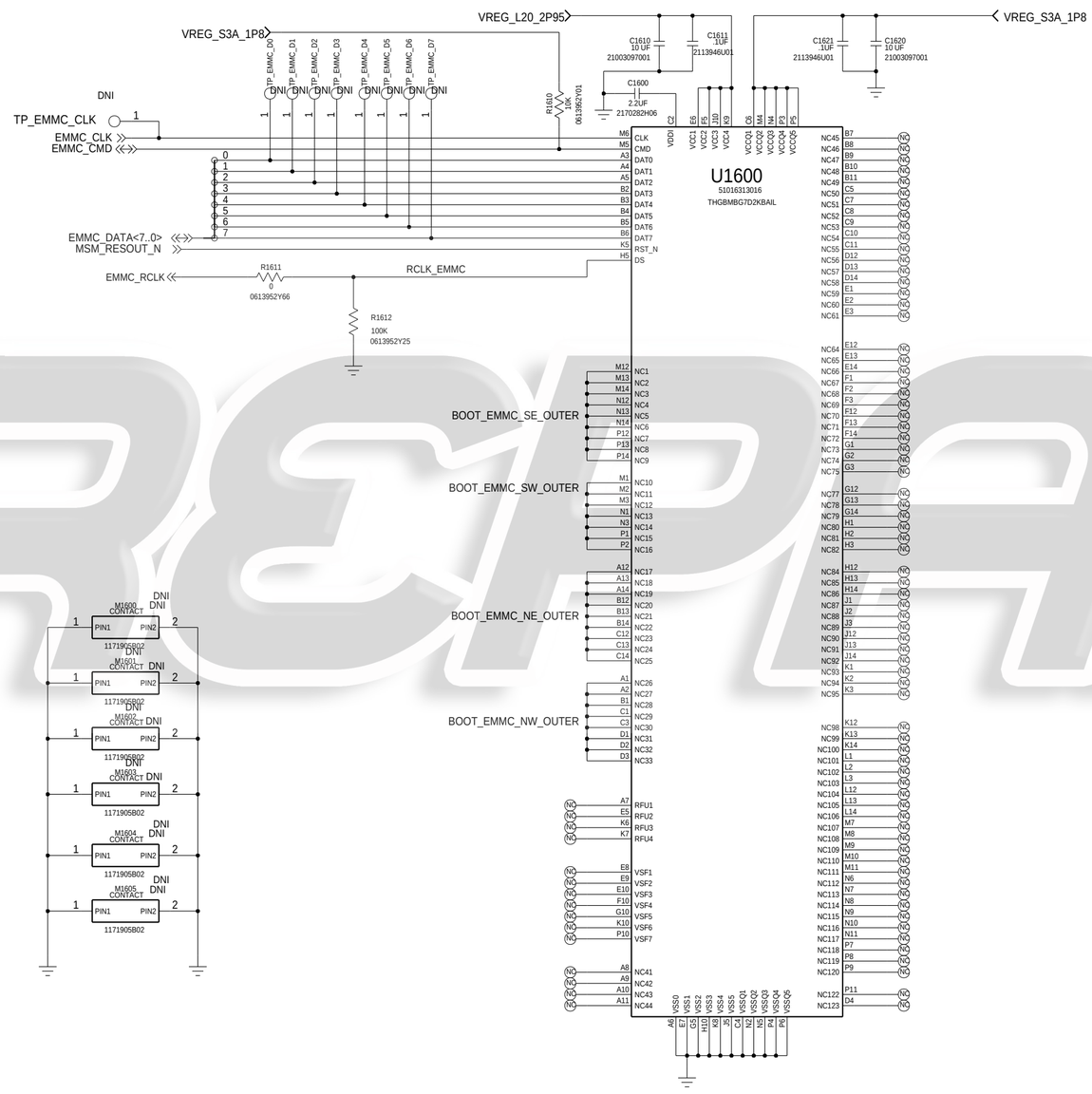

iREPAIR

APPROVALS	MOTOROLA MOBILE DEVICES
ENGINEER: X	BLOCK TITLE: 84016292001_b
LAST MODIFIED BY: X Thu Jun 26 14:18:39 2014	
MOTOROLA CONFIDENTIAL RESTRICTED THE DRAWING ON THIS PRINT AND INFORMATION THEREWITH ARE PROPRIETARY TO MOTOROLA AND SHALL NOT BE USED OR DISCUSSED IN WHOLE OR IN PART WITHOUT MOTOROLA'S CONSENT. © COPYRIGHT, MOTOROLA. THIS DOES NOT IMPLY PUBLICATION	C PROJECT NAME: 84016292001_b.cpm — REV: 01 CAD FILE NAME: PAGE 32 of 55

PM8941 CTRL/CLK/MPP/GPIO

REF 2000-2099

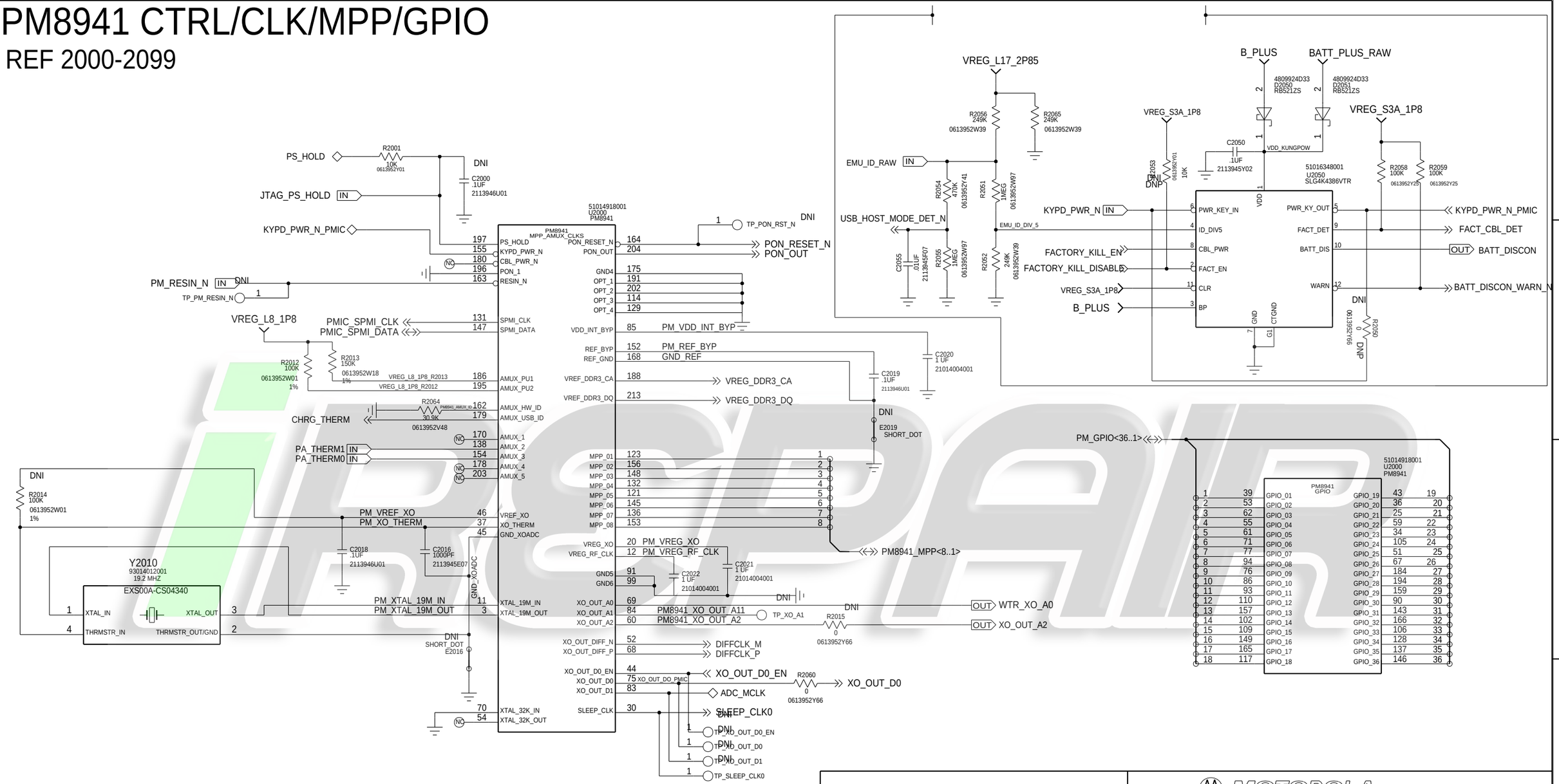

APPROVALS	MOTOROLA MOBILE DEVICES	
ENGINEER:	BLOCK TITLE: 84016292001_b	
LAST MODIFIED BY: Thu Jun 26 14:18:46 2014		
MOTOROLA CONFIDENTIAL RESTRICTED	B	PROJECT NAME: 84016292001_b.cpm — REV: 01
	CAD FILE NAME:	PAGE 33 OF 55

THE DRAWING ON THIS PRINT AND INFORMATION THEREWITH ARE PROPRIETARY TO MOTOROLA AND SHALL NOT BE USED OR DISCUSSED IN WHOLE OR IN PART WITHOUT MOTOROLA'S CONSENT.
© COPYRIGHT, MOTOROLA. THIS DOES NOT IMPLY PUBLICATION

PM8941 CHARGING

REF 2100-2199

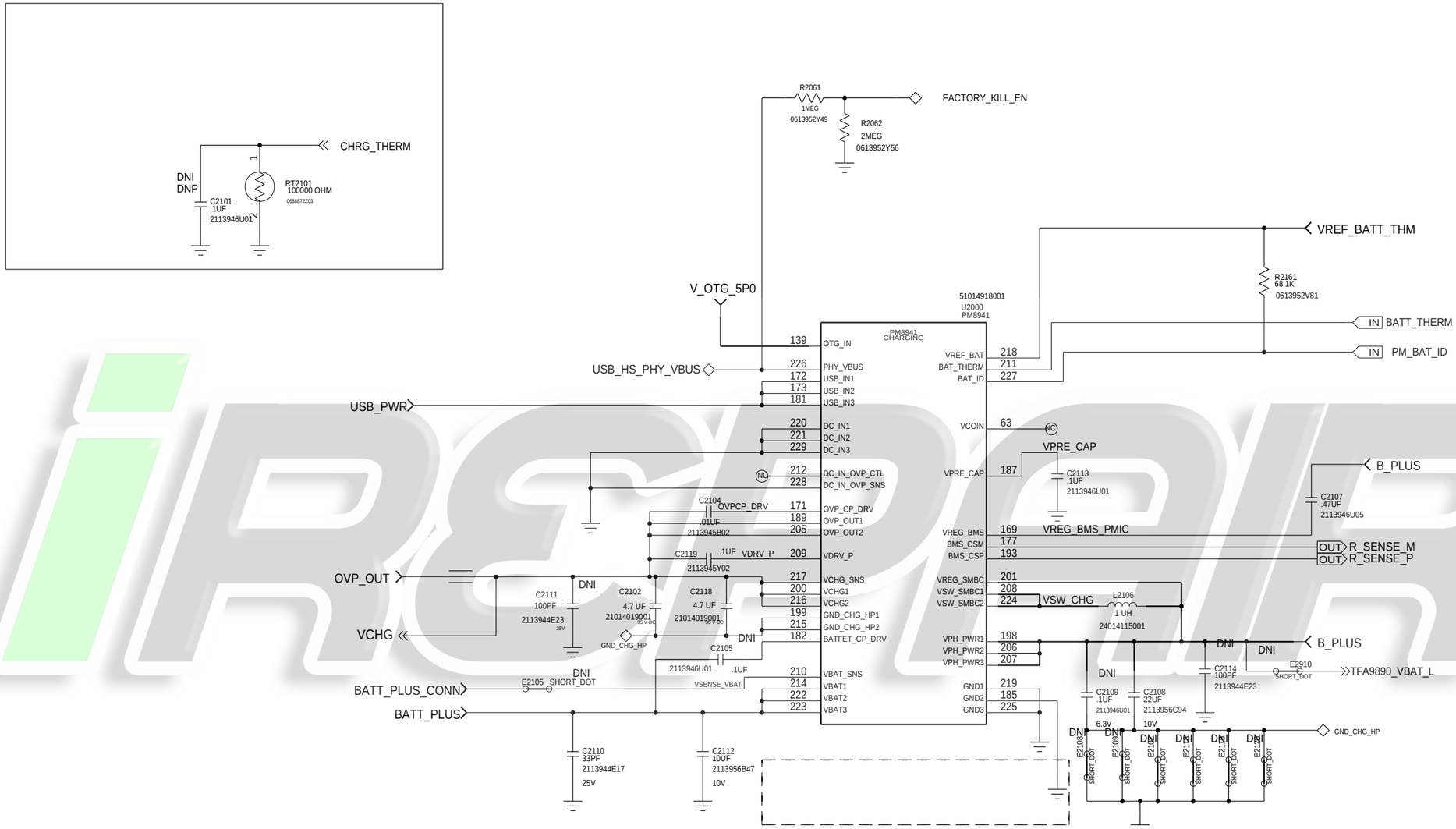

APPROVALS	MOTOROLA MOBILE DEVICES
ENGINEER:	BLOCK TITLE: 84016292001_b
LAST MODIFIED BY: Thu Jun 26 14:18:53 2014	
MOTOROLA CONFIDENTIAL RESTRICTED	B — PROJECT NAME: 84016292001_b.cpm — REV: 01
THE DRAWING ON THIS PRINT AND INFORMATION THEREWITH ARE PROPRIETARY TO MOTOROLA AND SHALL NOT BE USED OR DISCUSSED IN WHOLE OR IN PART WITHOUT MOTOROLA'S CONSENT. © COPYRIGHT, MOTOROLA. THIS DOES NOT IMPLY PUBLICATION	CAD FILE NAME:

PM8941 SMPS

REF 2200-2299

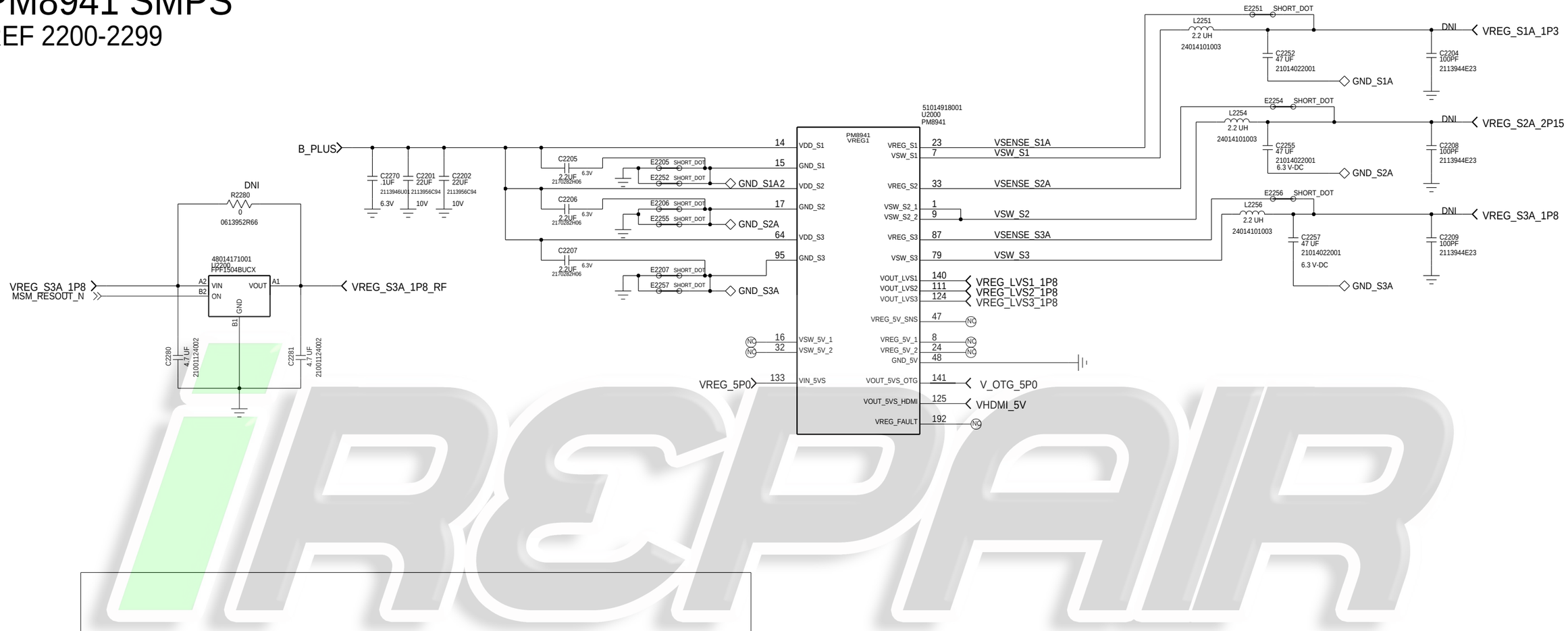

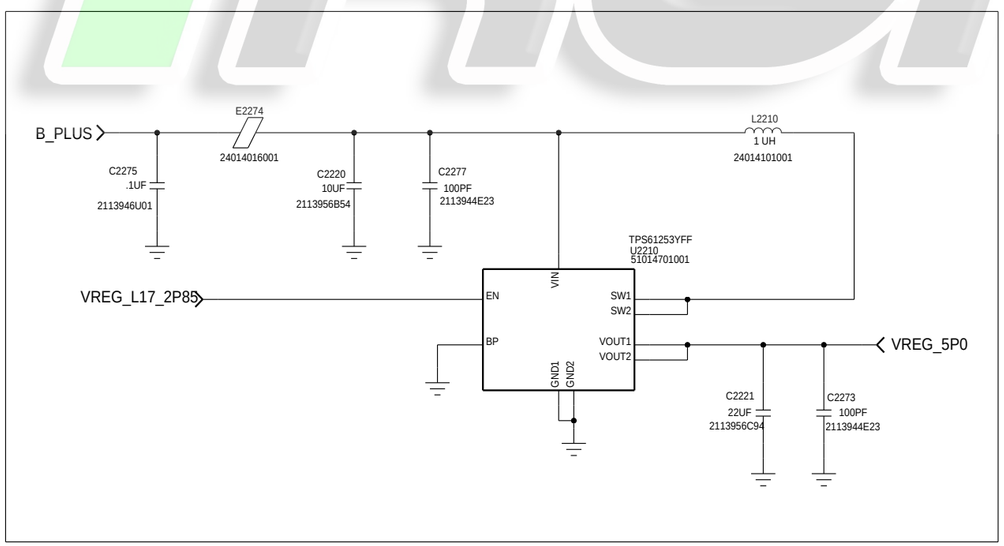

iREPAIR

APPROVALS	MOTOROLA MOBILE DEVICES
ENGINEER:	BLOCK TITLE: 84016292001_b
LAST MODIFIED BY: Thu Jun 26 14:18:59 2014	
MOTOROLA CONFIDENTIAL RESTRICTED	B — PROJECT NAME: 84016292001_b.cpm — REV: 01
THE DRAWING ON THIS PRINT AND INFORMATION THEREWITH ARE PROPRIETARY TO MOTOROLA AND SHALL NOT BE USED OR DISCUSSED IN WHOLE OR IN PART WITHOUT MOTOROLA'S CONSENT.	CAD FILE NAME:
© COPYRIGHT, MOTOROLA. THIS DOES NOT IMPLY PUBLICATION	PAGE 35 OF 55

PM8941 VREGS

REF 2300-2349

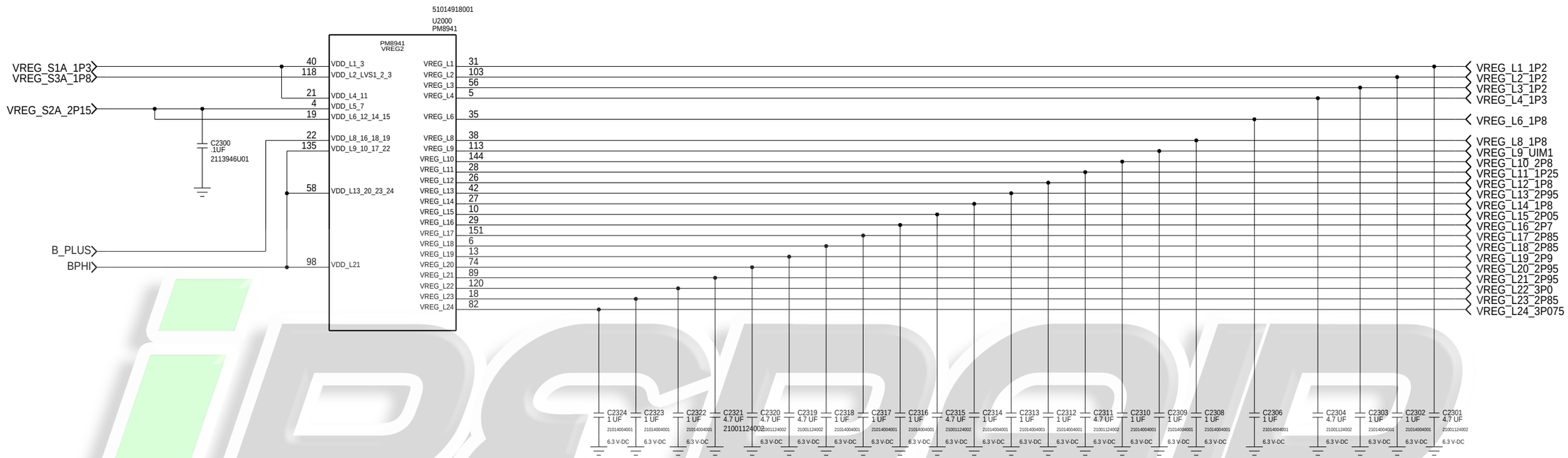

APPROVALS	MOTOROLA MOBILE DEVICES
ENGINEER:	BLOCK TITLE: 84016292001_b
LAST MODIFIED BY: Thu Jun 26 14:19:05 2014	
MOTOROLA CONFIDENTIAL RESTRICTED	B — PROJECT NAME: 84016292001_b.cpm — REV: 01
THE DRAWING ON THIS PRINT AND INFORMATION THEREWITH ARE PROPRIETARY TO MOTOROLA AND SHALL NOT BE USED OR DISCUSSED IN WHOLE OR IN PART WITHOUT MOTOROLA'S CONSENT.	CAD FILE NAME:
© COPYRIGHT, MOTOROLA. THIS DOES NOT IMPLY PUBLICATION	PAGE 36 OF 55

iRepair

PM8941 BPHI REGS

REF 2300-2500

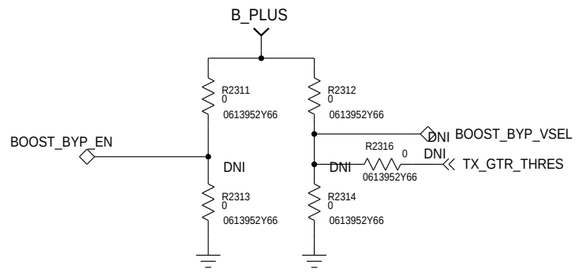

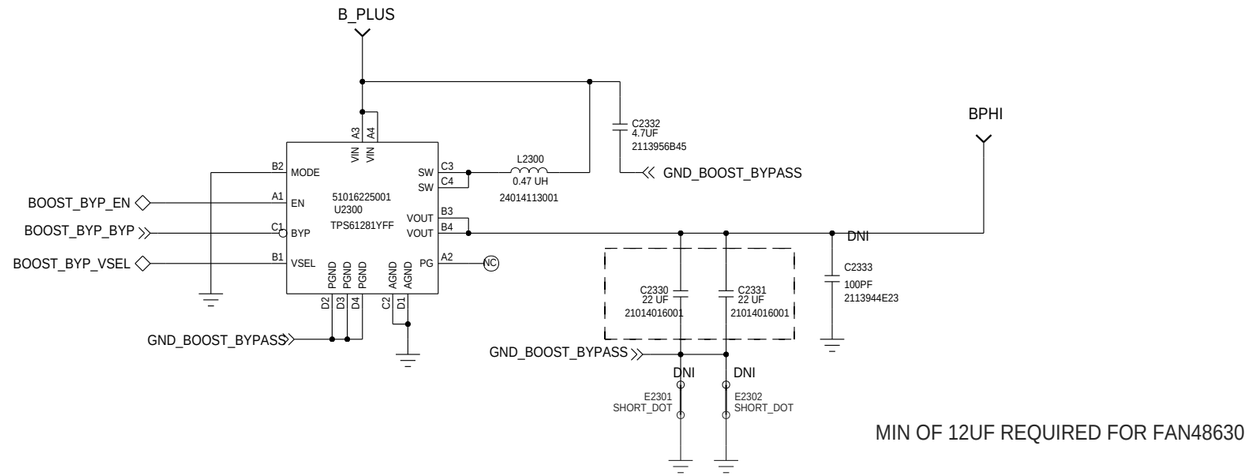

MIN OF 12UF REQUIRED FOR FAN48630

L2401 FOOTPRINT HOLDER - REPLACE WITH DFE252010C 0.47UH, 2.5MM X 2MM X 1MM

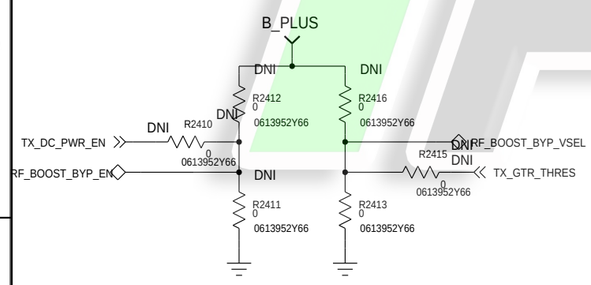

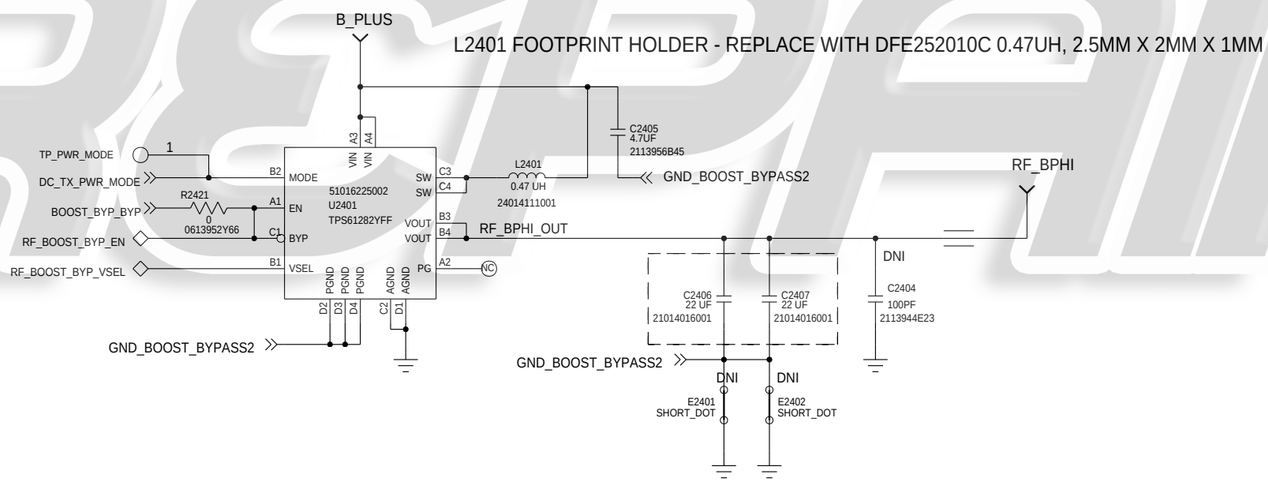

APPROVALS	MOTOROLA MOBILE DEVICES	
ENGINEER:	BLOCK TITLE: 84016292001_b	
LAST MODIFIED BY: Thu Jun 26 14:19:12 2014		
MOTOROLA CONFIDENTIAL RESTRICTED	B	PROJECT NAME: 84016292001_b.cpm — REV: 01
THE DRAWING ON THIS PRINT AND INFORMATION THEREWITH ARE PROPRIETARY TO MOTOROLA AND SHALL NOT BE USED OR DISCUSSED IN WHOLE OR IN PART WITHOUT MOTOROLA'S CONSENT. © COPYRIGHT, MOTOROLA. THIS DOES NOT IMPLY PUBLICATION	CAD FILE NAME:	PAGE 37 OF 55

iREPAIR

REF 2350-2359

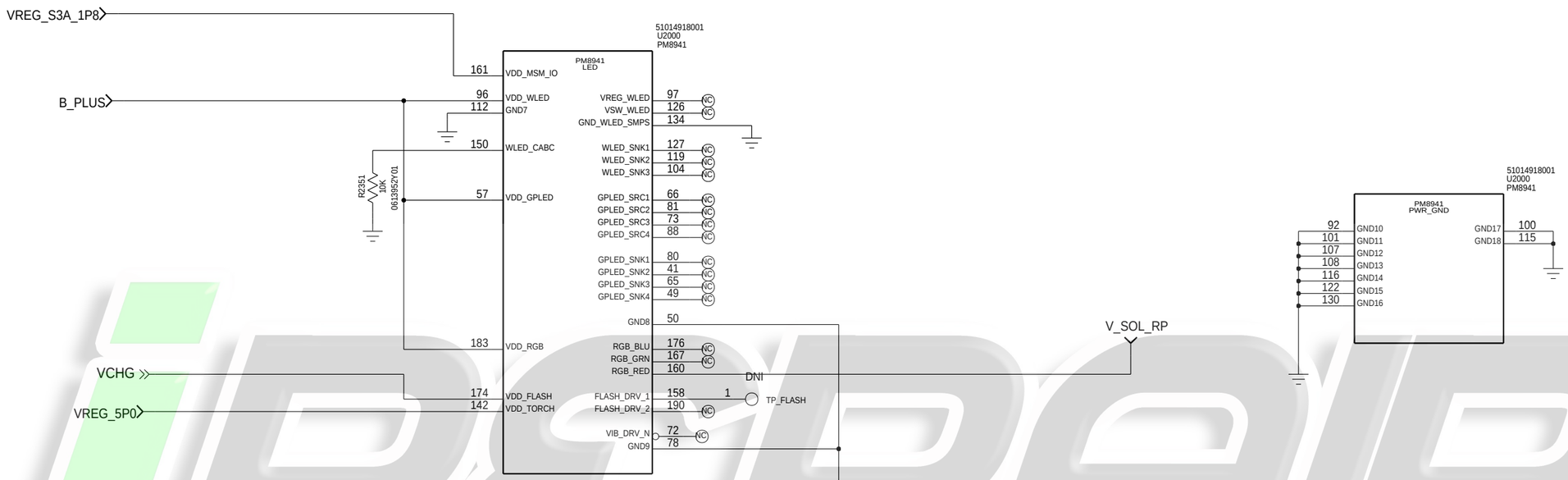

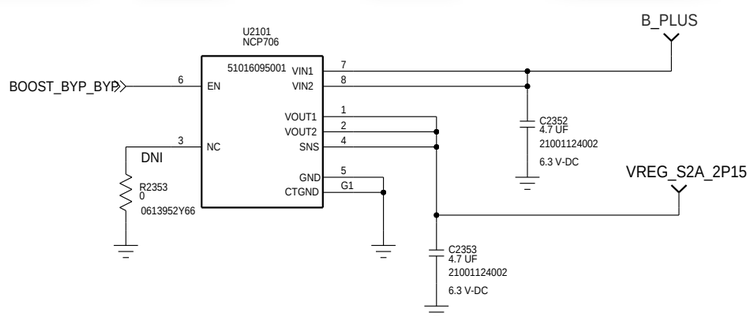

APPROVALS	MOTOROLA MOBILE DEVICES	
ENGINEER: RICHARD NG	BLOCK TITLE: 84016292001_b	
LAST MODIFIED BY: RICHARD NG Thu Jun 26 14:19:17 2014		
MOTOROLA CONFIDENTIAL RESTRICTED	B	PROJECT NAME 84016292001_b.cpm	REV 01
THE DRAWING ON THIS PRINT AND INFORMATION THEREWITH ARE PROPRIETARY TO MOTOROLA AND SHALL NOT BE USED OR DISCUSSED IN WHOLE OR IN PART WITHOUT MOTOROLA'S CONSENT. © COPYRIGHT, MOTOROLA. THIS DOES NOT IMPLY PUBLICATION	CAD FILE NAME:	PAGE 38 OF 55

iRepair

REF 2360-2399

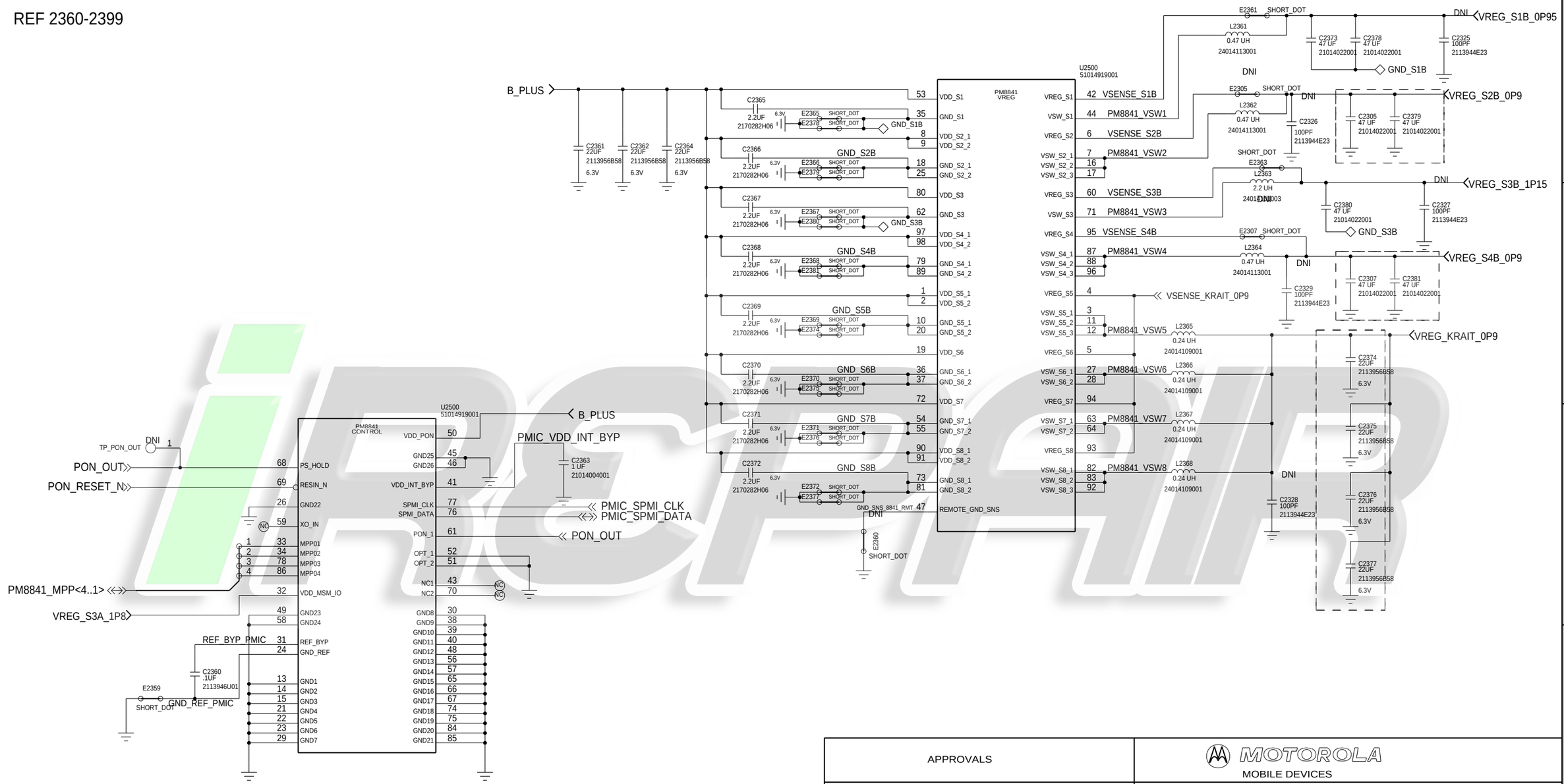

APPROVALS	MOTOROLA MOBILE DEVICES
ENGINEER: RICHARD NG	BLOCK TITLE: 84016292001_b
LAST MODIFIED BY: GARY QUARTANA Thu Jun 26 14:19:23 2014	
MOTOROLA CONFIDENTIAL RESTRICTED	B — PROJECT NAME: 84016292001_b.cpm — REV: 01
THE DRAWING ON THIS PRINT AND INFORMATION THEREWITH ARE PROPRIETARY TO MOTOROLA AND SHALL NOT BE USED OR DISCUSSED IN WHOLE OR IN PART WITHOUT MOTOROLA'S CONSENT. © COPYRIGHT, MOTOROLA. THIS DOES NOT IMPLY PUBLICATION	CAD FILE NAME:

RFFE: TRX SWITCH

REF 7100-8499

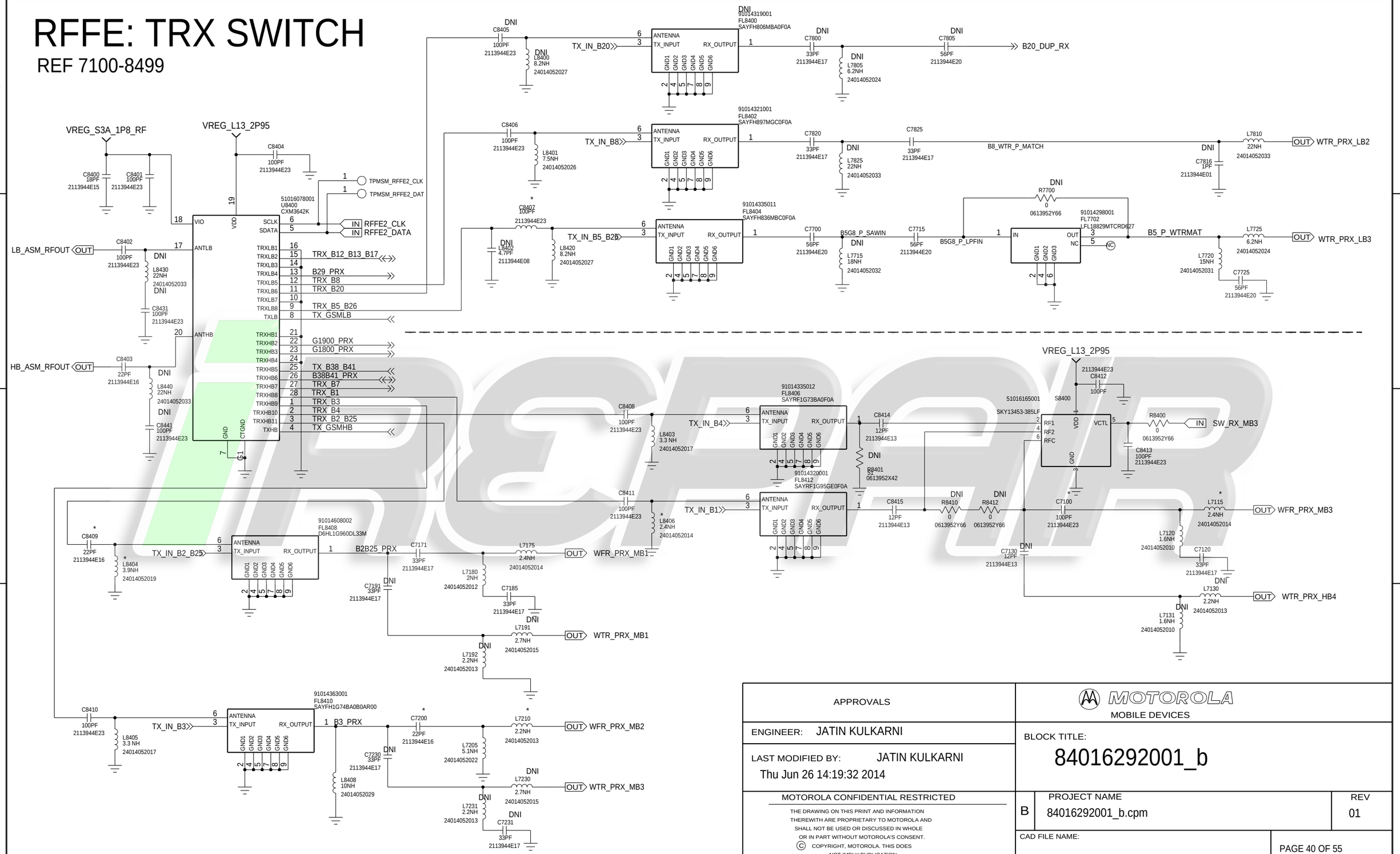

APPROVALS	MOTOROLA MOBILE DEVICES
ENGINEER: JATIN KULKARNI	BLOCK TITLE: 84016292001_b
LAST MODIFIED BY: JATIN KULKARNI Thu Jun 26 14:19:32 2014	
MOTOROLA CONFIDENTIAL RESTRICTED	B — PROJECT NAME: 84016292001_b.cpm — REV: 01
THE DRAWING ON THIS PRINT AND INFORMATION THEREWITH ARE PROPRIETARY TO MOTOROLA AND SHALL NOT BE USED OR DISCUSSED IN WHOLE OR IN PART WITHOUT MOTOROLA'S CONSENT. © COPYRIGHT, MOTOROLA. THIS DOES NOT IMPLY PUBLICATION	CAD FILE NAME:
	PAGE 40 OF 55

RFFE: PRX B29/B38/B41/GSM1800/GSM1900

REF 7100-8499

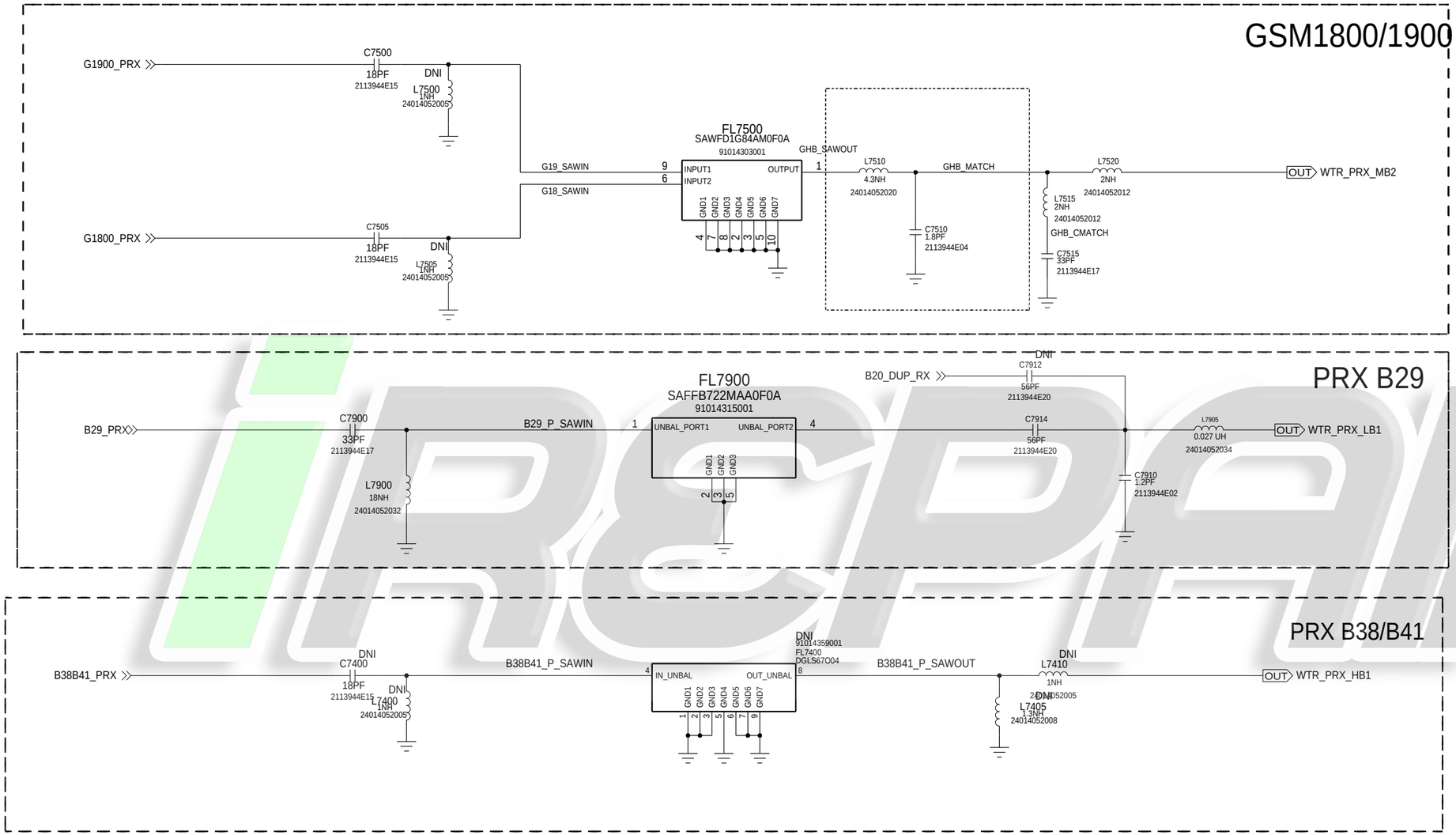

APPROVALS	MOTOROLA MOBILE DEVICES
ENGINEER: JATIN KULKARNI	BLOCK TITLE: 84016292001_b
LAST MODIFIED BY: JATIN KULKARNI Thu Jun 26 14:19:39 2014	
MOTOROLA CONFIDENTIAL RESTRICTED	B — PROJECT NAME: 84016292001_b.cpm — REV: 01
THE DRAWING ON THIS PRINT AND INFORMATION THEREWITH ARE PROPRIETARY TO MOTOROLA AND SHALL NOT BE USED OR DISCUSSED IN WHOLE OR IN PART WITHOUT MOTOROLA'S CONSENT. © COPYRIGHT, MOTOROLA. THIS DOES NOT IMPLY PUBLICATION	CAD FILE NAME:

RFFE: APT/ET

REF 8000-8099

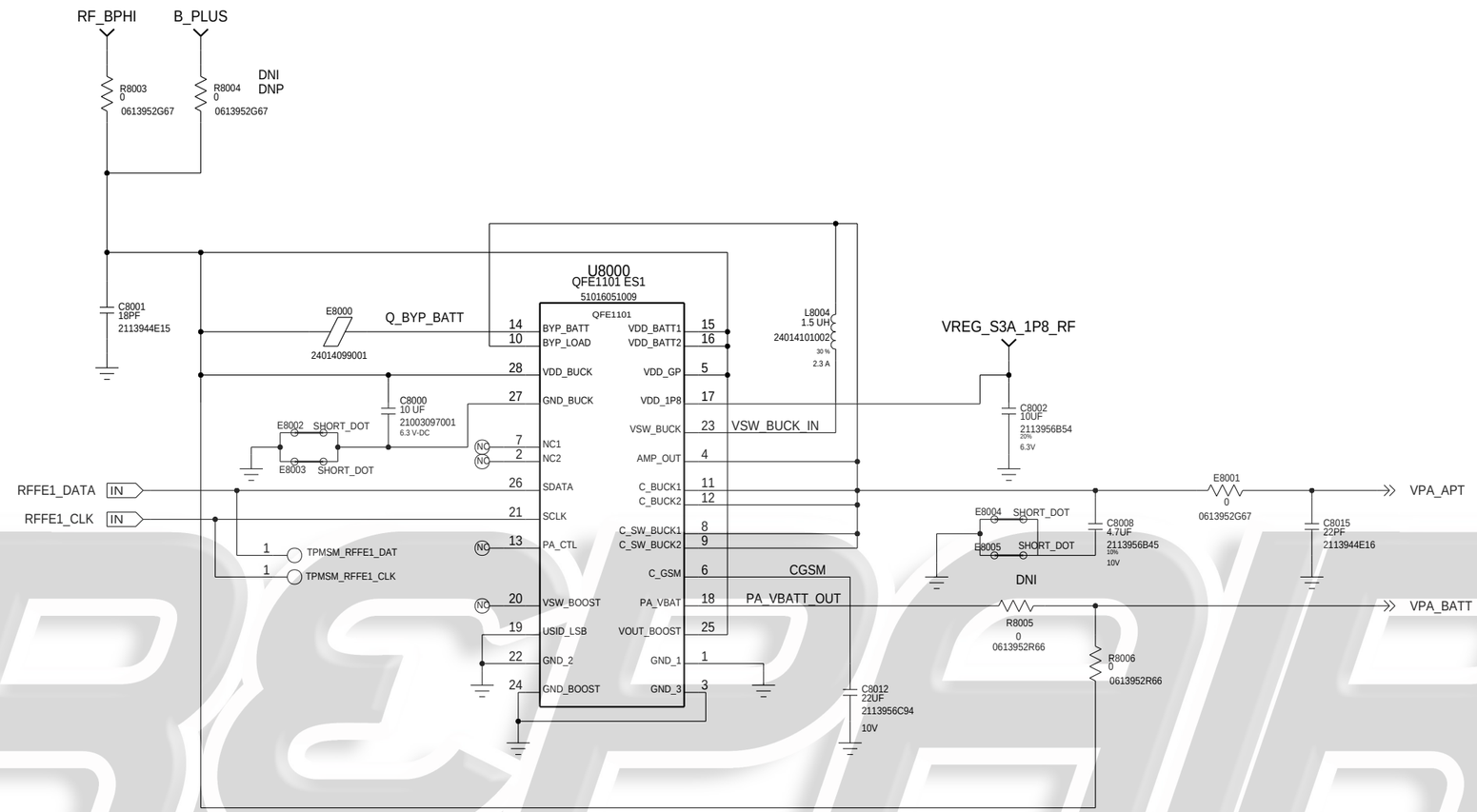

APPROVALS	MOTOROLA MOBILE DEVICES
ENGINEER:	BLOCK TITLE: 84016292001_b
LAST MODIFIED BY: Thu Jun 26 14:19:44 2014	
MOTOROLA CONFIDENTIAL RESTRICTED THE DRAWING ON THIS PRINT AND INFORMATION THEREWITH ARE PROPRIETARY TO MOTOROLA AND SHALL NOT BE USED OR DISCUSSED IN WHOLE OR IN PART WITHOUT MOTOROLA'S CONSENT. © COPYRIGHT, MOTOROLA. THIS DOES NOT IMPLY PUBLICATION	B — PROJECT NAME: 84016292001_b.cpm — REV: 01
	CAD FILE NAME: — PAGE 42 OF 55

iREPAIR

RFFE: TX MMMB PA

REF 8100-8199

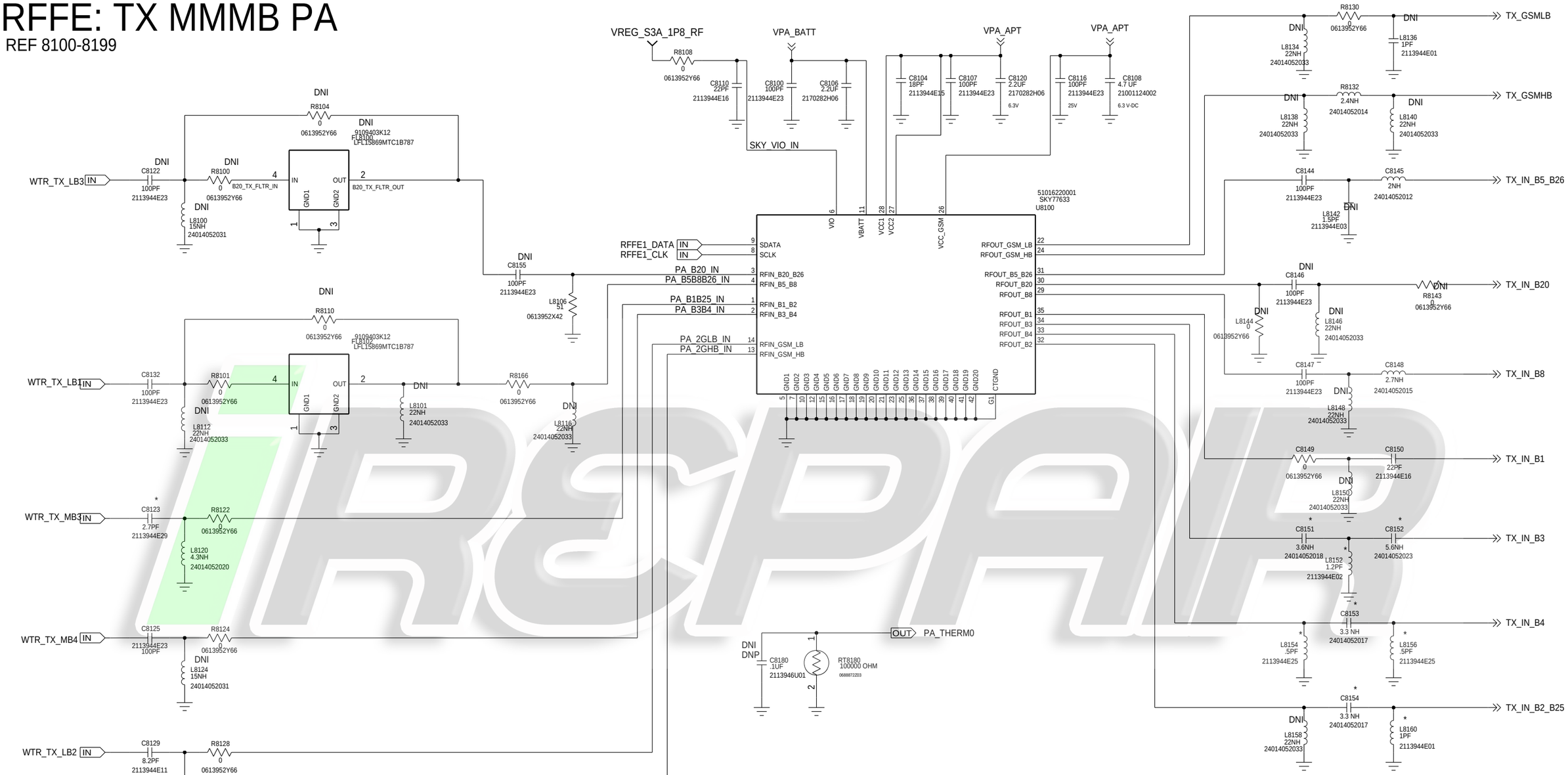

APPROVALS	MOTOROLA MOBILE DEVICES
ENGINEER: JATIN KULKARNI	BLOCK TITLE: 51016220001_b
LAST MODIFIED BY: JATIN KULKARNI Thu Jun 26 14:19:52 2014	
MOTOROLA CONFIDENTIAL RESTRICTED	B — PROJECT NAME: 84016292001_b.cpm — REV: 01
THE DRAWING ON THIS PRINT AND INFORMATION THEREWITH ARE PROPRIETARY TO MOTOROLA AND SHALL NOT BE USED OR DISCUSSED IN WHOLE OR IN PART WITHOUT MOTOROLA'S CONSENT. © COPYRIGHT, MOTOROLA. THIS DOES NOT IMPLY PUBLICATION	CAD FILE NAME:
	PAGE 43 OF 55

IRepair

RFFE: TX B7/B38/B41

REF 7100-8299

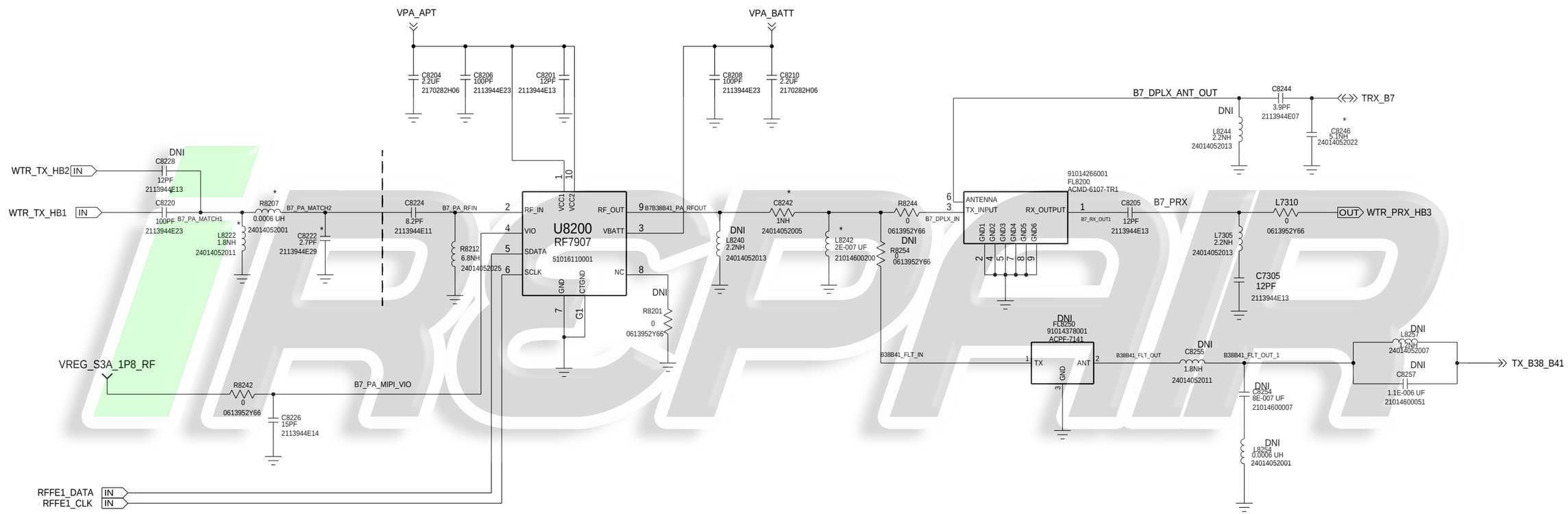

APPROVALS	MOTOROLA MOBILE DEVICES
ENGINEER:	BLOCK TITLE: 84016292001_b
LAST MODIFIED BY: Thu Jun 26 14:19:59 2014	
MOTOROLA CONFIDENTIAL RESTRICTED	B — PROJECT NAME: 84016292001_b.cpm — REV: 01
THE DRAWING ON THIS PRINT AND INFORMATION THEREWITH ARE PROPRIETARY TO MOTOROLA AND SHALL NOT BE USED OR DISCUSSED IN WHOLE OR IN PART WITHOUT MOTOROLA'S CONSENT. © COPYRIGHT, MOTOROLA. THIS DOES NOT IMPLY PUBLICATION	CAD FILE NAME: — PAGE 44 OF 55

RFFE: TX B12/B17/B13

REF 7600-8399

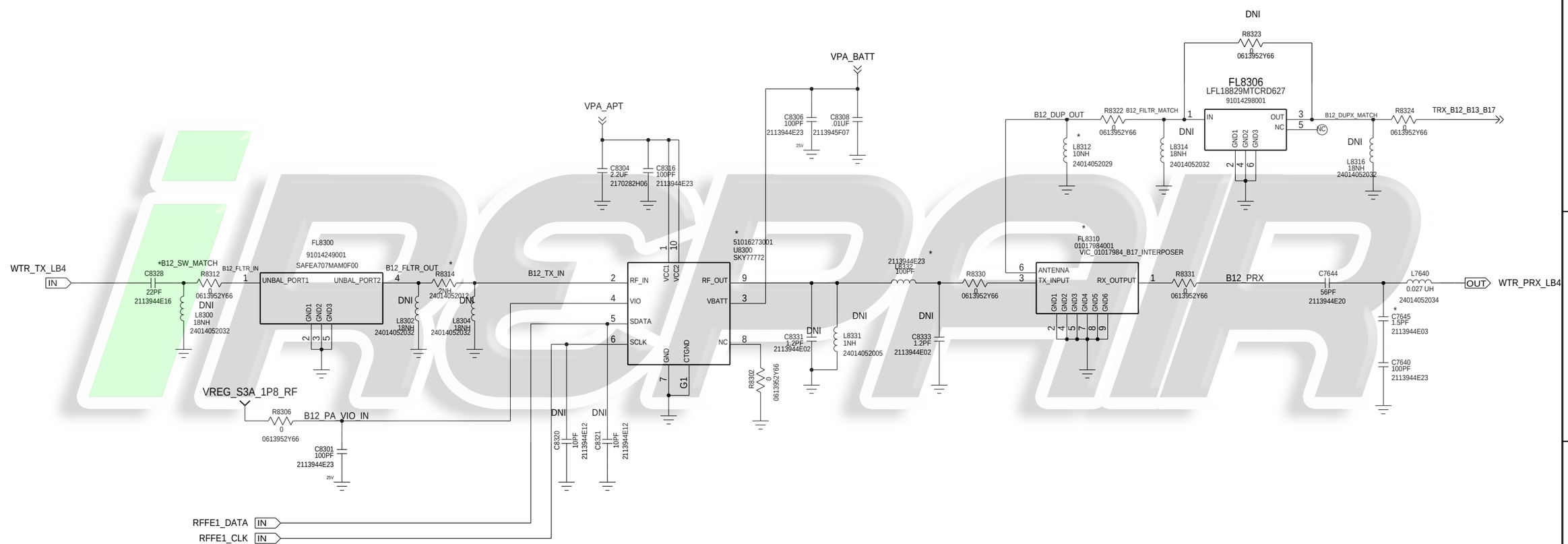

APPROVALS	MOTOROLA MOBILE DEVICES
ENGINEER:	BLOCK TITLE: 84016292001_b
LAST MODIFIED BY: Thu Jun 26 14:20:07 2014	
MOTOROLA CONFIDENTIAL RESTRICTED	B — PROJECT NAME: 84016292001_b.cpm — REV: 01
THE DRAWING ON THIS PRINT AND INFORMATION THEREWITH ARE PROPRIETARY TO MOTOROLA AND SHALL NOT BE USED OR DISCUSSED IN WHOLE OR IN PART WITHOUT MOTOROLA'S CONSENT. © COPYRIGHT, MOTOROLA. THIS DOES NOT IMPLY PUBLICATION	CAD FILE NAME: — PAGE 45 OF 55

iRESPIR

RFFE: DRX ANTENNA SWITCH

REF 7100-8499

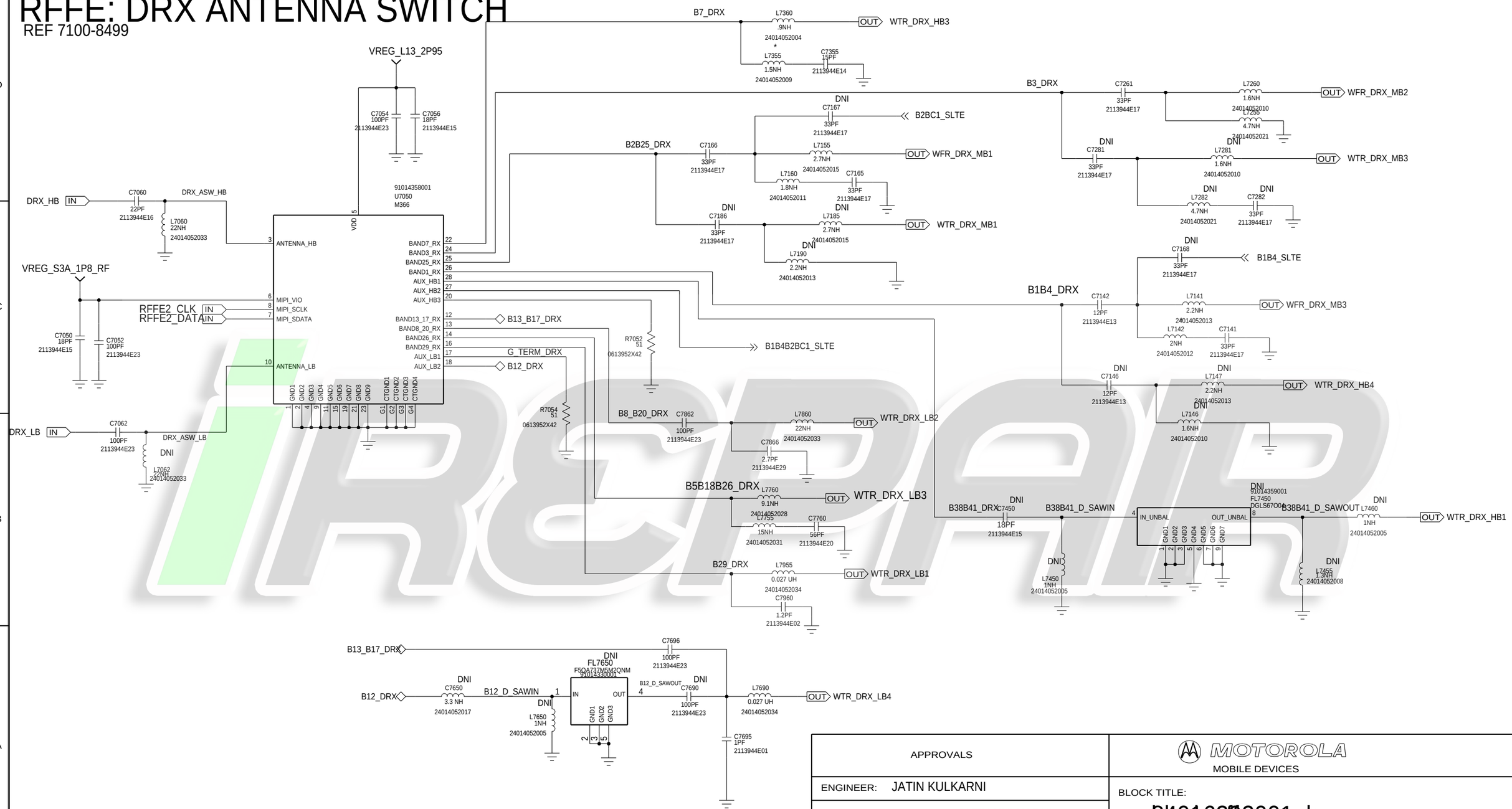

APPROVALS	MOTOROLA MOBILE DEVICES
ENGINEER: JATIN KULKARNI	BLOCK TITLE: 84016292001_b
LAST MODIFIED BY: JATIN KULKARNI Thu Jun 26 14:20:14 2014	
MOTOROLA CONFIDENTIAL RESTRICTED	B — PROJECT NAME: 84016292001_b.cpm — REV: 01
THE DRAWING ON THIS PRINT AND INFORMATION THEREWITH ARE PROPRIETARY TO MOTOROLA AND SHALL NOT BE USED OR DISCUSSED IN WHOLE OR IN PART WITHOUT MOTOROLA'S CONSENT. © COPYRIGHT, MOTOROLA. THIS DOES NOT IMPLY PUBLICATION	CAD FILE NAME:

RFFE: SLTE B2/BC1/B1/B4

REF : 7100-8499

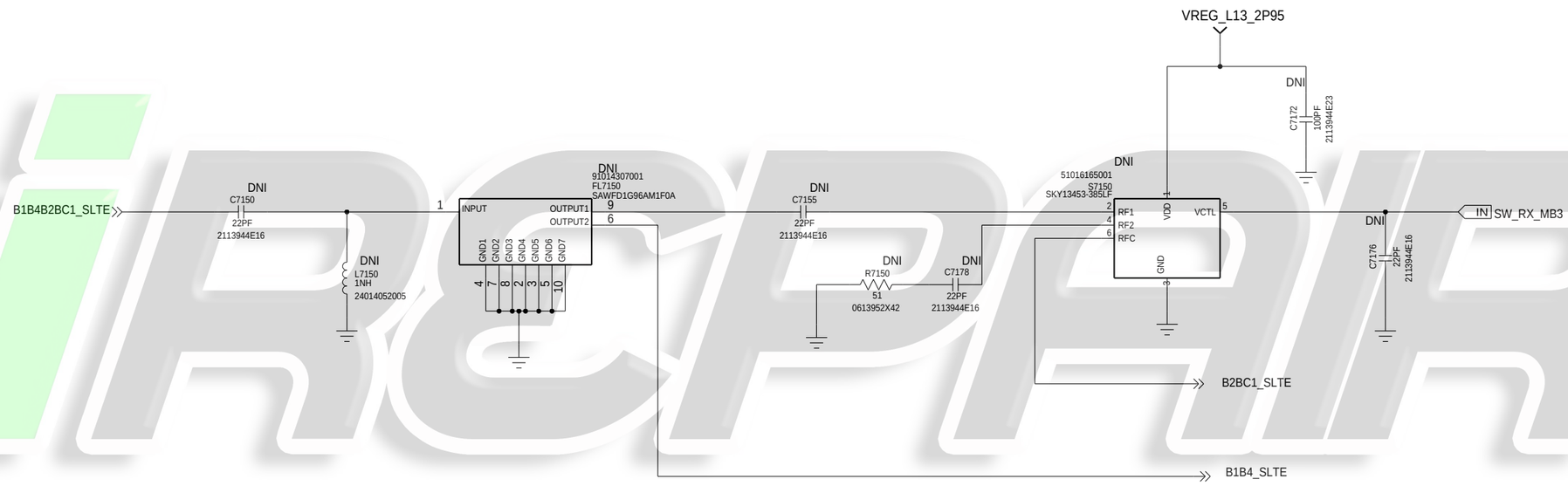

APPROVALS	MOTOROLA MOBILE DEVICES
ENGINEER:	BLOCK TITLE: 84016292001_b
LAST MODIFIED BY: Thu Jun 26 14:20:20 2014	
MOTOROLA CONFIDENTIAL RESTRICTED	PROJECT NAME: 84016292001_b.cpm — REV: 01
THE DRAWING ON THIS PRINT AND INFORMATION THEREWITH ARE PROPRIETARY TO MOTOROLA AND SHALL NOT BE USED OR DISCUSSED IN WHOLE OR IN PART WITHOUT MOTOROLA'S CONSENT. © COPYRIGHT, MOTOROLA. THIS DOES NOT IMPLY PUBLICATION	CAD FILE NAME: — PAGE 47 OF 55

B

RFFE: GPS

REF : 8500-8549

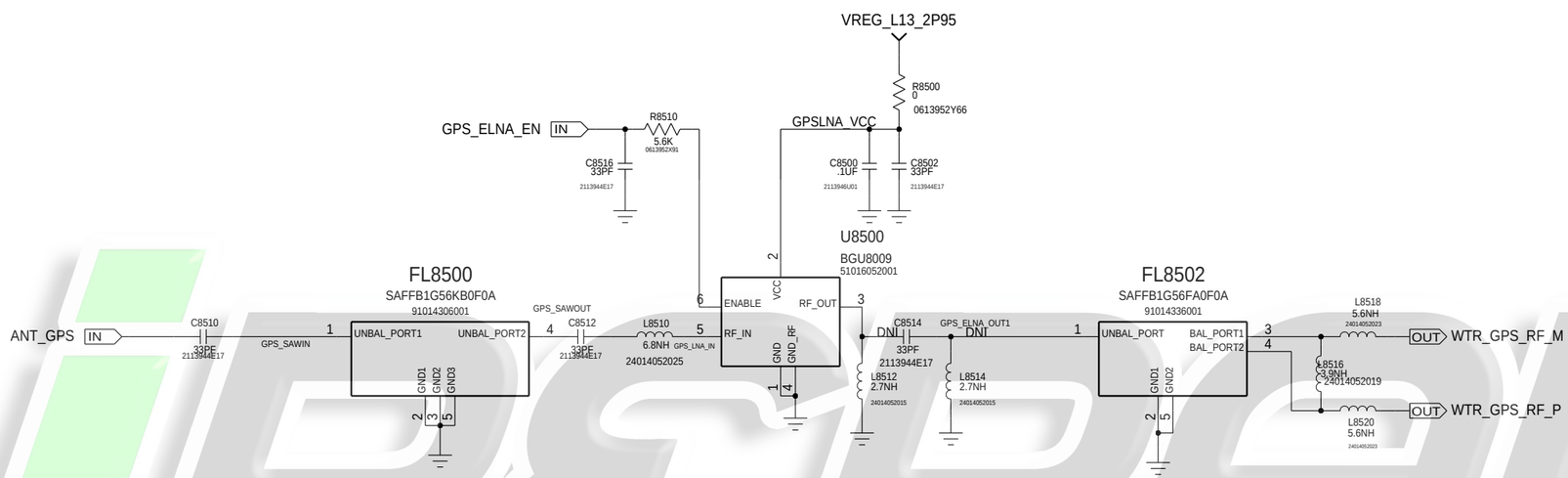

APPROVALS	MOTOROLA MOBILE DEVICES
ENGINEER:	BLOCK TITLE: 51016052001_b
LAST MODIFIED BY: Thu Jun 26 14:20:26 2014	
MOTOROLA CONFIDENTIAL RESTRICTED	B — PROJECT NAME: 89716292 — 89716292001_b.cpm — REV: 01
THE DRAWING ON THIS PRINT AND INFORMATION THEREWITH ARE PROPRIETARY TO MOTOROLA AND SHALL NOT BE USED OR DISCUSSED IN WHOLE OR IN PART WITHOUT MOTOROLA'S CONSENT. © COPYRIGHT, MOTOROLA. THIS DOES NOT IMPLY PUBLICATION	CAD FILE NAME:

WFR1620: BB RF

REF 3000-3099

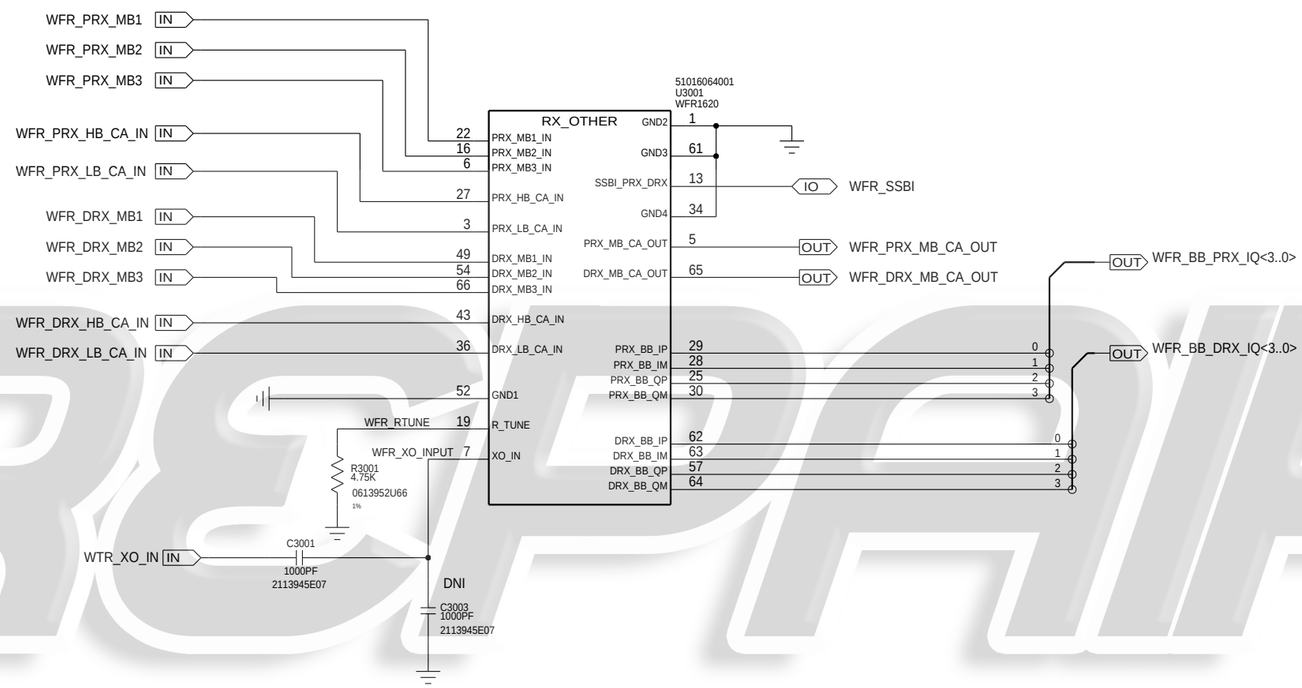

APPROVALS	MOTOROLA MOBILE DEVICES
ENGINEER:	BLOCK TITLE: 84016292001_b
LAST MODIFIED BY: Thu Jun 26 14:20:32 2014	
MOTOROLA CONFIDENTIAL RESTRICTED	B — PROJECT NAME: 84016292001_b.cpm — REV: 01
THE DRAWING ON THIS PRINT AND INFORMATION THEREWITH ARE PROPRIETARY TO MOTOROLA AND SHALL NOT BE USED OR DISCUSSED IN WHOLE OR IN PART WITHOUT MOTOROLA'S CONSENT. © COPYRIGHT, MOTOROLA. THIS DOES NOT IMPLY PUBLICATION	CAD FILE NAME: — PAGE 49 OF 55

iRepair

WFR1620: POWER

REF 3100-3199

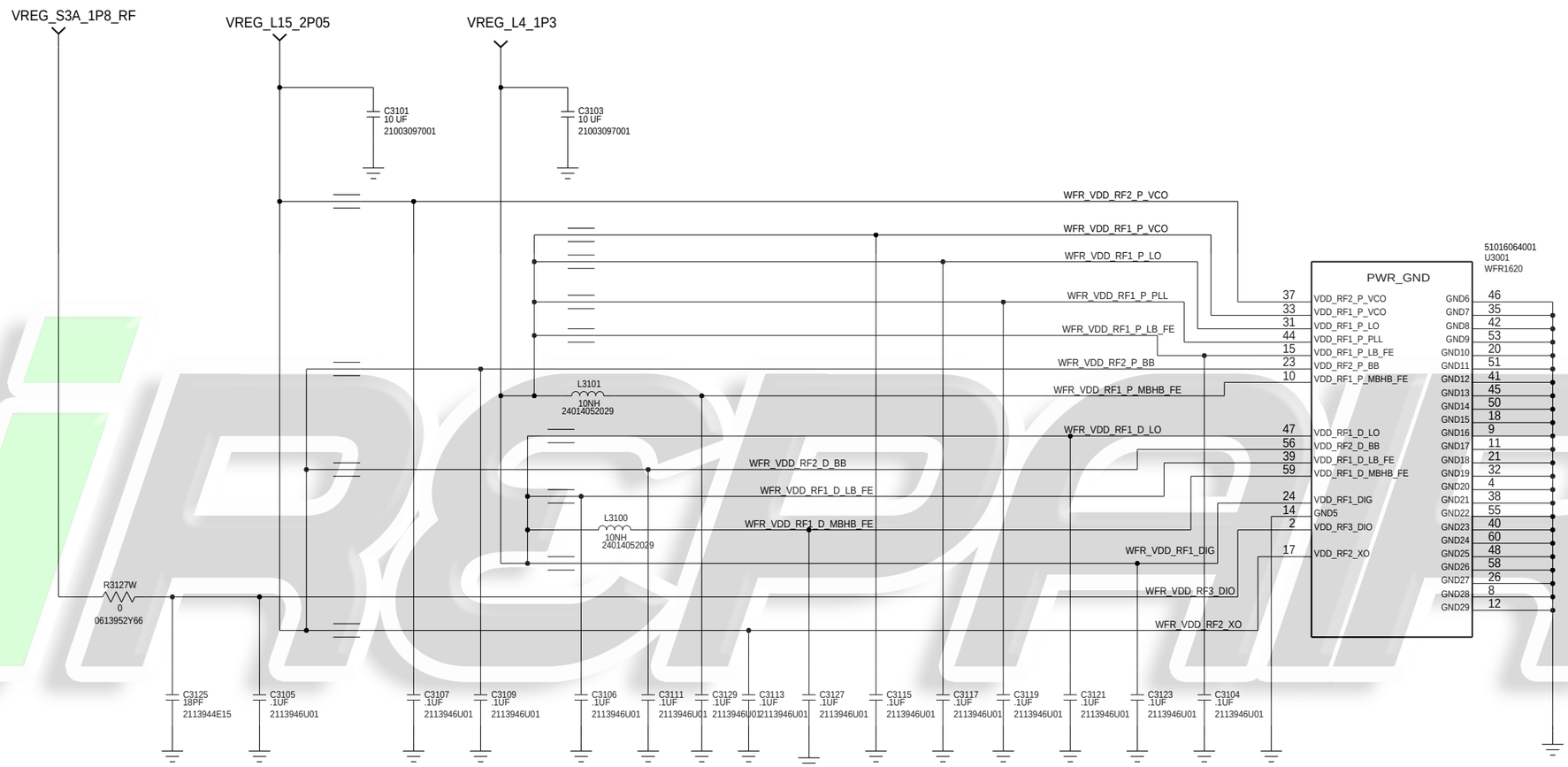

APPROVALS	MOTOROLA MOBILE DEVICES
ENGINEER:	BLOCK TITLE: 84016292001_b
LAST MODIFIED BY: Thu Jun 26 14:20:37 2014	
MOTOROLA CONFIDENTIAL RESTRICTED	B — PROJECT NAME: 84016292001_b.cpm — REV: 01
THE DRAWING ON THIS PRINT AND INFORMATION THEREWITH ARE PROPRIETARY TO MOTOROLA AND SHALL NOT BE USED OR DISCUSSED IN WHOLE OR IN PART WITHOUT MOTOROLA'S CONSENT. © COPYRIGHT, MOTOROLA. THIS DOES NOT IMPLY PUBLICATION	CAD FILE NAME: — PAGE 50 OF 55

iREPAIR

WTR1625: TX/GROUND

REF 3200-3299

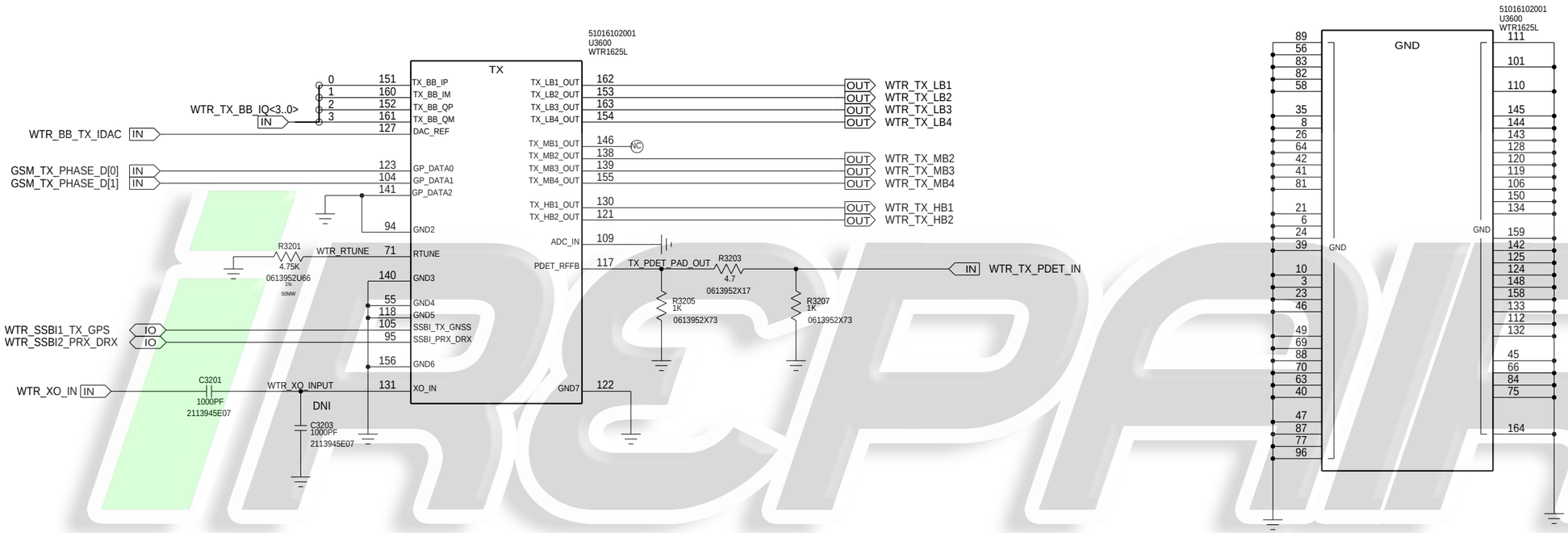

MOTOROLA CONFIDENTIAL RESTRICTED

THE DRAWING ON THIS PRINT AND INFORMATION THEREWITH ARE PROPRIETARY TO MOTOROLA AND SHALL NOT BE USED OR DISCUSSED IN WHOLE OR IN PART WITHOUT MOTOROLA'S CONSENT.

© COPYRIGHT, MOTOROLA. THIS DOES NOT IMPLY PUBLICATION

APPROVALS	MOTOROLA MOBILE DEVICES	
ENGINEER:	BLOCK TITLE: 84016292001_b	
LAST MODIFIED BY: Thu Jun 26 14:20:43 2014		
	PROJECT NAME: 84016292001_b.cpm	REV: 01
	CAD FILE NAME:	PAGE 51 OF 55

WTR1625: PRX/DRX/GPS

REF 3300-3399

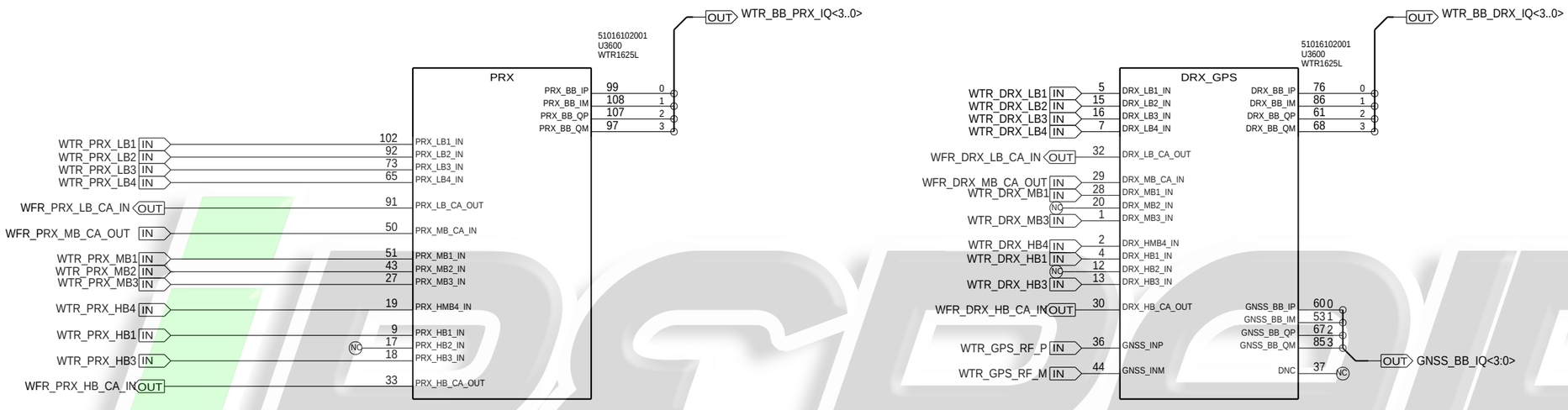

iRCPAIR

APPROVALS	MOTOROLA MOBILE DEVICES
ENGINEER:	BLOCK TITLE: 84016292001_b
LAST MODIFIED BY: Thu Jun 26 14:20:49 2014	
MOTOROLA CONFIDENTIAL RESTRICTED	PROJECT NAME: 84016292001_b.cpm — REV: 01
THE DRAWING ON THIS PRINT AND INFORMATION THEREWITH ARE PROPRIETARY TO MOTOROLA AND SHALL NOT BE USED OR DISCUSSED IN WHOLE OR IN PART WITHOUT MOTOROLA'S CONSENT. © COPYRIGHT, MOTOROLA. THIS DOES NOT IMPLY PUBLICATION	CAD FILE NAME:

WTR1625: POWER

REF 3600-3699

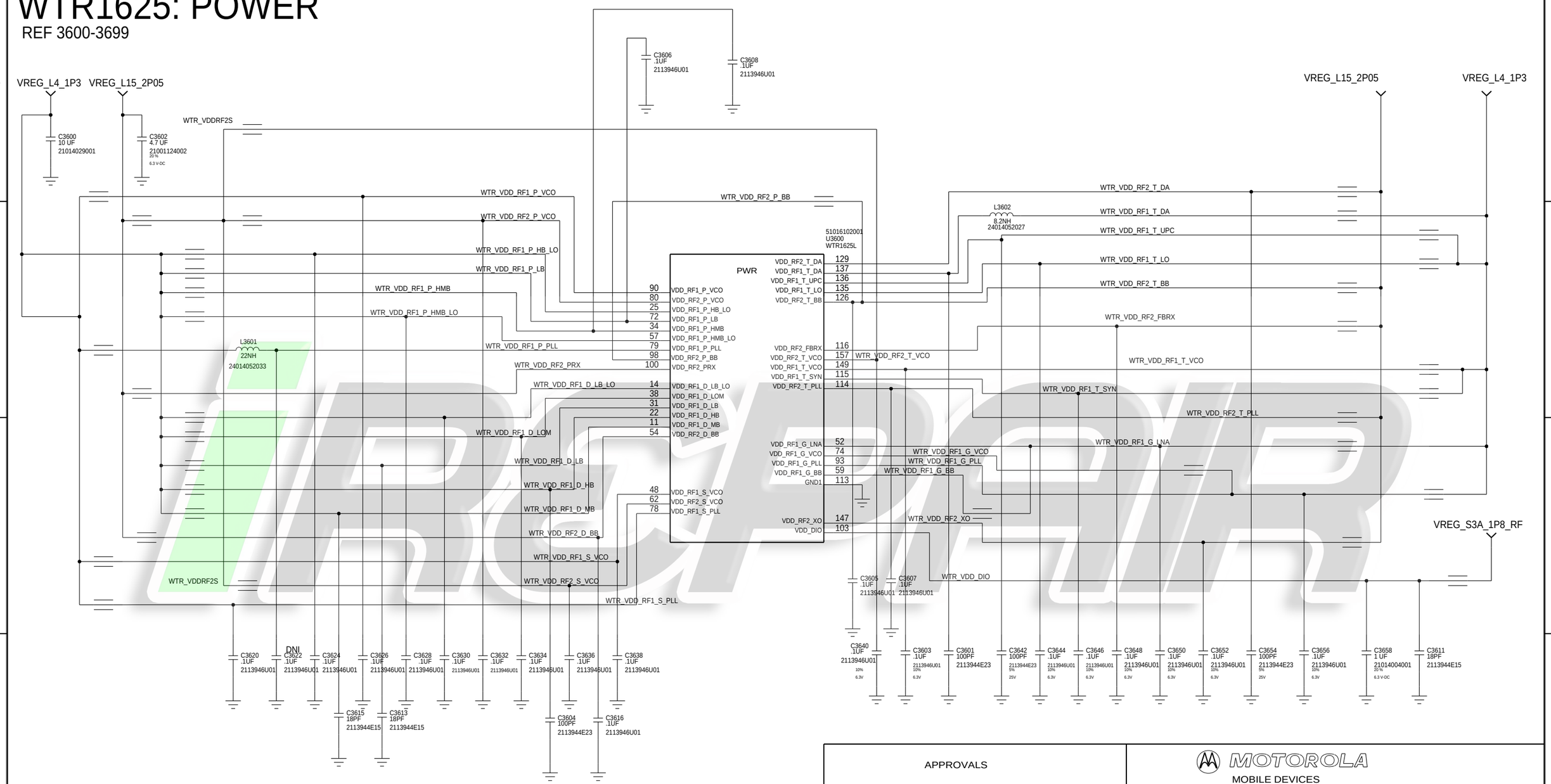

APPROVALS	MOTOROLA MOBILE DEVICES
ENGINEER:	BLOCK TITLE: 84016292001_b
LAST MODIFIED BY: Thu Jun 26 14:20:56 2014	
MOTOROLA CONFIDENTIAL RESTRICTED	PROJECT NAME: 84016292001_b.cpm (B) — REV: 01
THE DRAWING ON THIS PRINT AND INFORMATION THEREWITH ARE PROPRIETARY TO MOTOROLA AND SHALL NOT BE USED OR DISCUSSED IN WHOLE OR IN PART WITHOUT MOTOROLA'S CONSENT. © COPYRIGHT, MOTOROLA. THIS DOES NOT IMPLY PUBLICATION	CAD FILE NAME:
	PAGE 53 OF 55

WCN3660/3680 RF/CTRL

REF 4600-4699

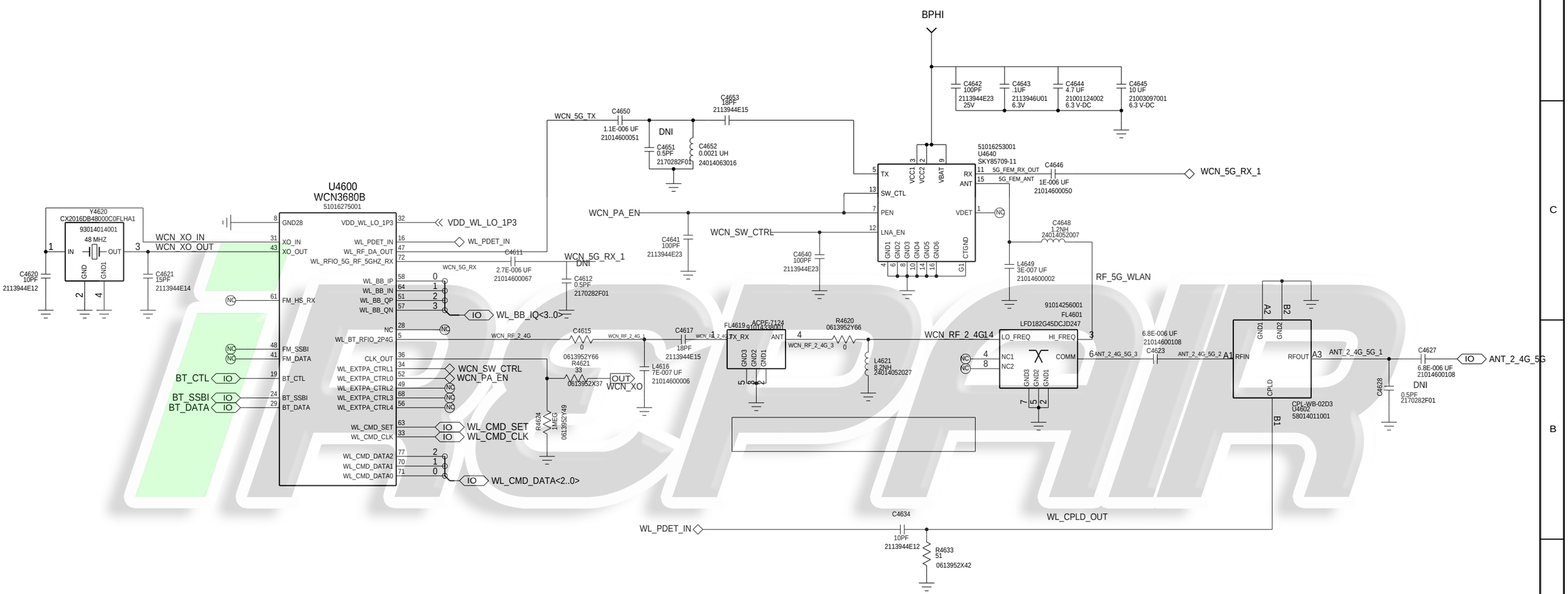

APPROVALS	MOTOROLA MOBILE DEVICES
ENGINEER:	BLOCK TITLE: 84016292001_b
LAST MODIFIED BY: FROEHLING Thu Jun 26 14:21:03 2014	
MOTOROLA CONFIDENTIAL RESTRICTED	B — PROJECT NAME: 84016292001_b.cpm — REV: 01
THE DRAWING ON THIS PRINT AND INFORMATION THEREWITH ARE PROPRIETARY TO MOTOROLA AND SHALL NOT BE USED OR DISCUSSED IN WHOLE OR IN PART WITHOUT MOTOROLA'S CONSENT. © COPYRIGHT, MOTOROLA. THIS DOES NOT IMPLY PUBLICATION	CAD FILE NAME:
	PAGE 54 OF 55

WCN3660 POWER
REF 4700-4799

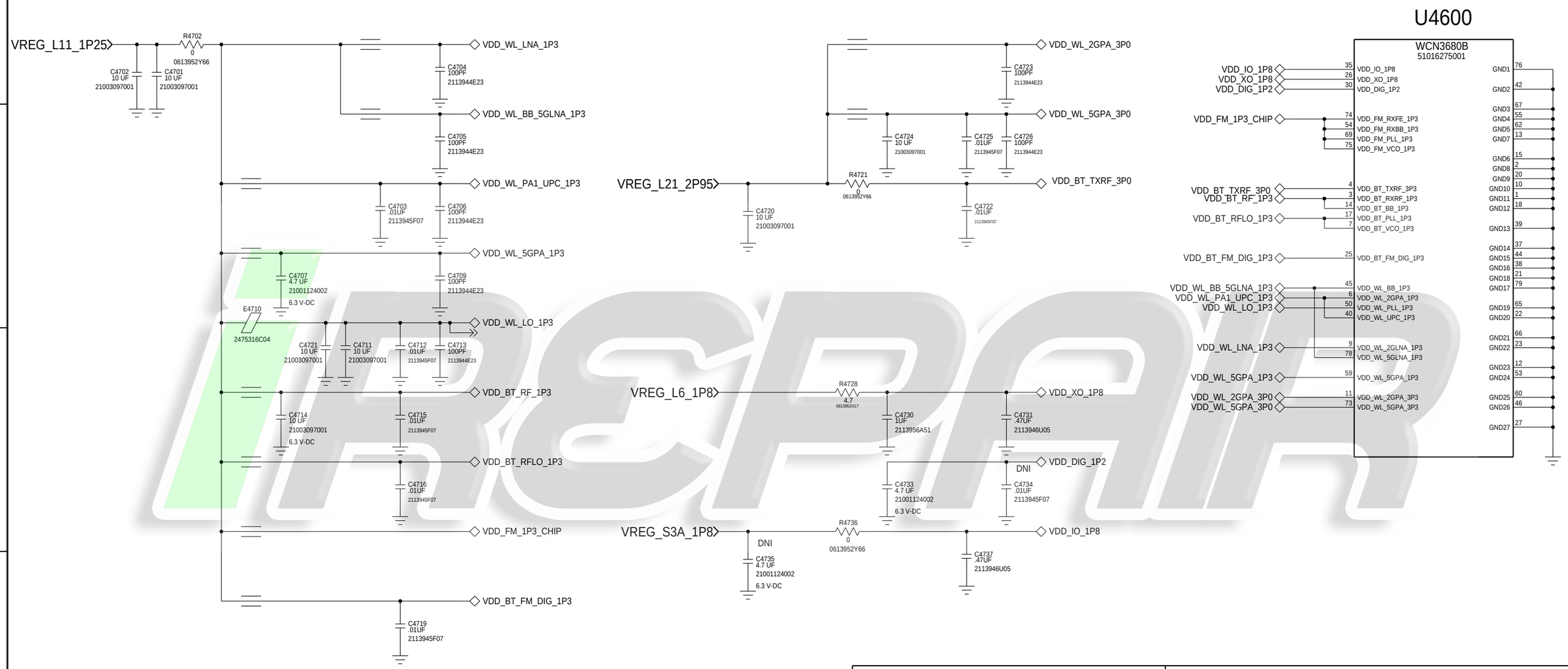

APPROVALS	MOTOROLA MOBILE DEVICES
ENGINEER:	BLOCK TITLE: 84016292001_b
LAST MODIFIED BY: FROEHLING Thu Jun 26 14:21:10 2014	
MOTOROLA CONFIDENTIAL RESTRICTED THE DRAWING ON THIS PRINT AND INFORMATION THEREWITH ARE PROPRIETARY TO MOTOROLA AND SHALL NOT BE USED OR DISCUSSED IN WHOLE OR IN PART WITHOUT MOTOROLA'S CONSENT. © COPYRIGHT, MOTOROLA. THIS DOES NOT IMPLY PUBLICATION	B — PROJECT NAME: 84016292001_b.cpm — REV: 01
	CAD FILE NAME: — PAGE 55 OF 55

HEPAIR